Automation and Software tools

Let's connect.

Version 2019

Weidmüller

Automation and Software tools

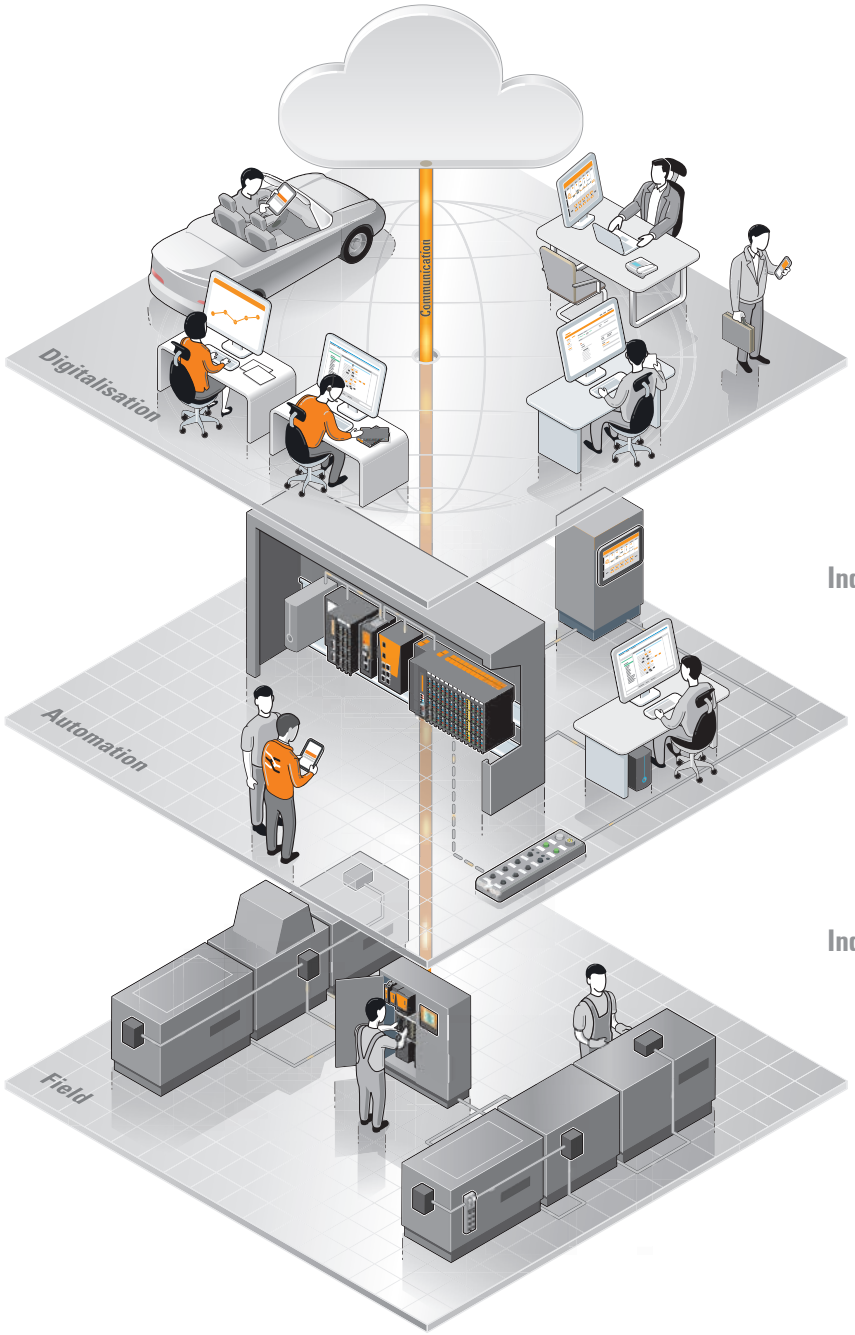

engineering tool (u-create studio)

engineering tool (u-create web/ NODE-Red)

visualisation tool u-create PROCON-WEB

Control (u-control 2000)

I/O system (u-remote IP20)

Industrial PC's, Panel PC's and Monitors (u-view)

Touch Panels (u-view)

Control (u-control 2000)

I/O system (u-remote IP67)

Industrial PC's, Panel PC's and Monitors (u-view)

Automation and Software tools
Catalogue 10

Automation and Software tools

Control (PLC) – u-control

I/O system IP20 - u-remote

I/O system IP67 - u-remote

Touch Panels - u-view

Industrial PC's, Panel PC's and Monitors - u-view

Engineering- & visualisation tools - u-create

Appendix

Service and support

Index

Index Type / Index Order No.
Addresses worldwide

Control (PLC) - u-control

Control studio
Page A.4

- CoDeSys-based // C/C++
- Dual-core CPU, 512 Mbyte RAM
- Engineeringtool u-create studio

Control web
Page A.5

- Web-based // HTML5
- Dual-core CPU, 512 Mbyte RAM
- With embedded Software

I/O system IP20 - u-remote

Fieldbus coupler
Page B.4

- PROFINET, PROFIBUS, EtherCAT, ModbusTCP, EtherNet/IP, DeviceNet, CANopen, POWERLINK

Digital input modules
Page B.20

- 4-16 digital inputs
- Positive & negative switching
- 2-wire, 3-wire and 3-wire+FE Connection

Digital output modules
Page B.36

- 4-16 digital outputs
- Positive & negative switching
- 2-wire, 3-wire and 3-wire+FE Connection

Digital in-/output modules
Page B.52

- 8 digital inputs/outputs (configurable)
- Positive switching
- 2-wire, 3-wire Connection

Pulse width modulation and stepper motor modules
Page B.54

- 2 pulse width outputs
- Load capacity up to 0.5 - 2 A per channel
- 4 digital inputs and 2 inputs for 2-channel incremental (rotary) encoder
- 50 W Power output stage

Analogue input modules
Page B.58

- 4 and 8 analog inputs
- 12 to 32 bit resolution
- 2-wire, 3-wire and 3-wire+FE Connection
- Extended diagnostic function

I/O System IP20 - u-remote

Temperature modules and potentiometer input module Page B.70

Temperature modules:
- 4 - 8 analog inputs
- Temperature measurement via resistance

Potentiometer input module:
- 4 potentiometer inputs
- Measuring area from 300 Ω ... 50 kΩ

Strain gauge moduls
Page B.76

- 2 differential inputs for strain gages
- 24 bit resolution
- 4- or 6-wire connection

Analogue output modules
Page B.80

- 4 analog outputs
- 16 bit resolution
- 2-wire and 4-wire connection
- Extended diagnostic function

Digital counter and communication modules
Page B.88

Counter modules
- Latch, gate- and reset input
- Counter width 32 Bit
- Maximum input frequency 100 kHz

Communication modules:
- SAI-PRO modules can be integrated
- Interface for RS232, RS485 and RS422 Perepheria
- IO-Link standard according to IEC 61131-9

Safe I/O modules and safe power-feed modules
Page B.98

- PROFIsafe or FailSafe over EtherCAT
- 4 to 8 digital inputs (partly parameterizable)
- 4 digital outputs (partly parameterizable)
- OSSD-output reports status to controller

Power-feed modules
Page B.106

- Input of the current paths
- Feed-in current 10 A

Accessories
Page B.110

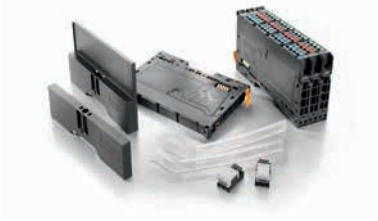

- Placeholder modules
- Conclusion kit
- Potential distribution modules

I/O System IP67 - u-remote

PROFINET IO-LINK
Page C.4

- IO-Link, 4x Type A, 4x Type B
- Fieldbus protocol PROFINET
- Width 30 to 60 mm

Multiprotocol (PROFINET + EtherCAT + EtherNet/IP)
Page C.5

- 8 to 16 digital inputs and outputs
- Fieldbus protocol PROFINET, EtherNet/IP and EtherCAT
- M12, L-coded or 7/8" connection

Push/ Pull
Page C.9

- 8 to 16 digital inputs and outputs
- Fieldbus protocol PROFINET
- Connection 8x M12 socket 5-pole, acoded
- Sensor/actuator active distributor

PROFIBUS
Page C.12

- 8 to 16 digital inputs (some universal)
- Fieldbus protocol PROFIBUS

CANopen
Page C.18

- 16 digital inputs/ 8 digital outputs
- Fieldbus protocol CANopen
- Partly 4 analog inputs / 2 analog inputs exits

DeviceNet
Page C.21

- 4 or 16 digital inputs
- Fieldbus protocol DeviceNet
- 4 analog inputs / 2 analog outputs
- Gateway (DeviceNet)

Subbus
Page C.24

- 8 digital inputs/ 8 digital outputs
- 4 analog outputs
- Subbus Module

Accessories
Page C.32

- Sensor cables
- Assembly tool

Touch Panels - u-view

Touch Panel (BASIC)
Page D.2

- Resitive touch
- 4.3“; 7“; 10.1“
- High-quality aluminium frame

Multitouch Panel (ADVANCED)
Page D.6

- Capacitive multi-touch
- 7"; 10.1"; 15.6"
- Fitted glass front

Industrial PC‘s, Panel PC‘s and Monitors - u-view

Industrial PC‘s
Page E.2

- Optimized design for every performance class
- From Intel Atom to Intel Core i7
- Passive cooling
- State-of-the-art SSD technology

Industrial Panel PC‘s
Page E.10

- Resitive touch or capacitive multi-touch
- Display sizes from 7" - 21.5"
- Passive cooling
- State-of-the-art SSD technology
- Panel mounting with protection class IP66

Industrial Monitors
Page E.13

- Capacitive multi-touch
- Display sizes from 10,1" - 21,5"
- Panel mounting with protection class IP66

Engineering- & visualisation tools - u-create

u-create studio
Page F.2

- CoDeSys-based // C/C++

u-create web
Page F.3

- Web-based // HTML5

u-create PROCON-WEB
Page F.6

- Web-based visualisation

Control (PLC)
u-control

Control (PLC)
u-control

u-control 2000	A.2
u-control 2000 with u-create studio	A.4
u-control 2000 with u-create web	A.5

Flexible automation of applications
u-control 2000 for a powerful and compact control system

The powerful u-control 2000 controller is based on a compact design of the u-remote fieldbus coupler - for even greater space savings and maximum Flexibility in the implementation of individual automation solutions. It is is compatible with the entire u-remote portfolio and offers the possibility to I/O modules directly. Combined with our versatile Engineering tools u-create studio and u-create web unfold their full potential Range of applications.

The u-control 2000 is equipped with an Ethernet based fieldbus and a TCP/IP interface for programming. The controller also has an optional CAN interface. Optionally, communication via the Modbus TCP protocol is also possible. In addition, u-control 2000 has a dual-core ARM-A9 processor and a USB service interface. In addition to the battery-buffered real-time clock, it also has a slot for a MicroSD with up to 32 GB.

In combination with the u-create software tools, u-control enables a maximum of customization.

Flexible
Compatible with u-create and u-remote

Comfortable
Battery-buffered real-time clock

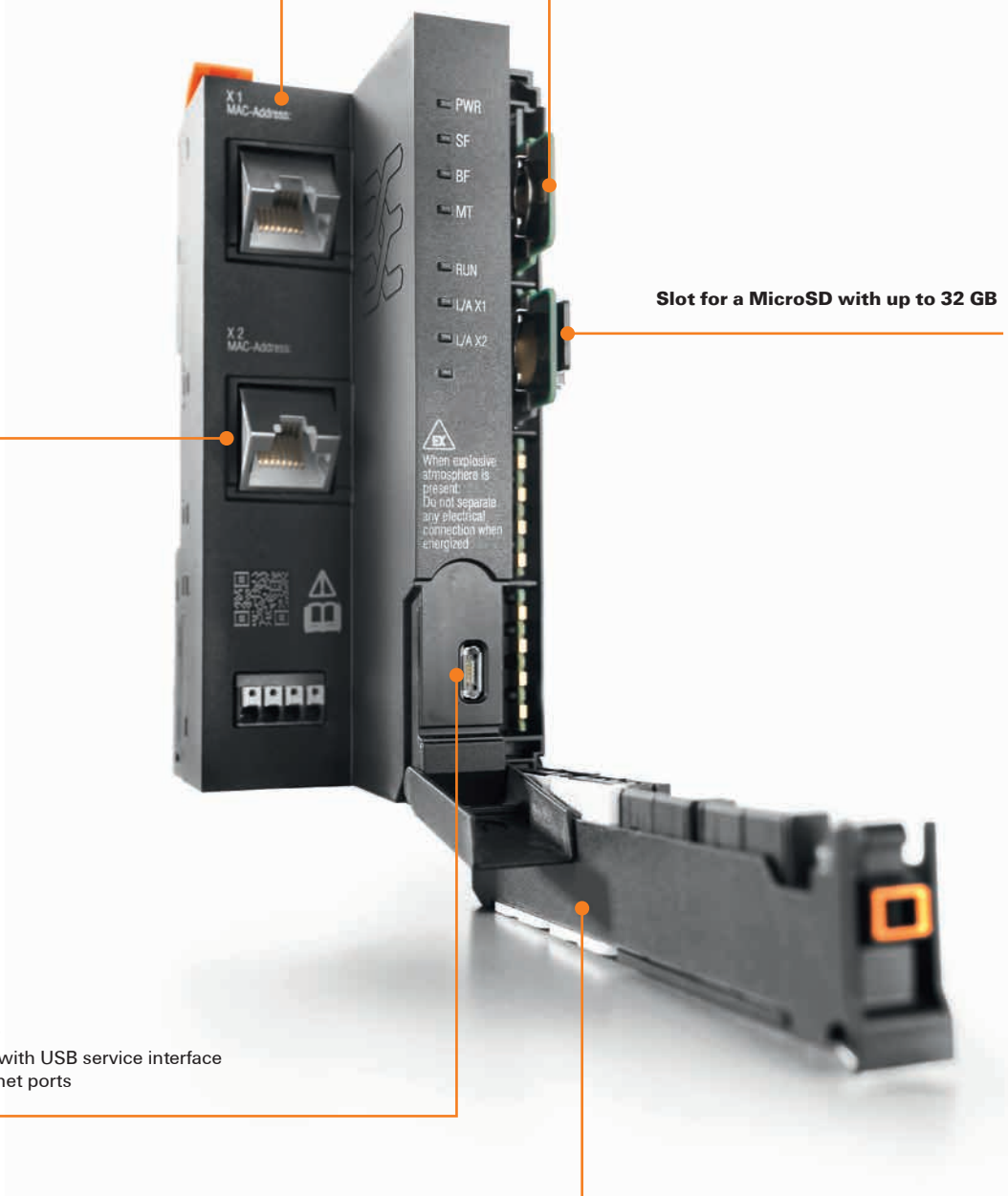

Slot for a MicroSD with up to 32 GB

Compact
54 mm schmal

Diversity
Equipped with USB service interface and Ethernet ports

Secure
Secruity-by-Design Concept

UC20-SL2000-OLAC-EC

- OpenLinux automation controller
- Engineering tool u-create studio
- System supply of 64 I/O modules
- Configurable as EtherCAT master
- 2 x 5 A current path

UC20-SL2000-OLAC-EC

Technical data

System data	
Connection type	2 x RJ45 plug-in connectors
max. number of modules	64
Configuration interface	Micro USB 2.0
Processor	Dual Core ARM Cortex A9, 624 MHz, 512 Mbyte RAM
Memory (Flash)	4 GB, 32 GB via microSD
Real-time clock	Battery buffered
Engineering tool	u-create Studio
Field bus protocol	EtherCAT
Supply	
Supply voltage for inputs	24 V DC +20 %/ -15 %
Supply voltage for outputs	24 V DC +20 %/ -15 %
Feed current for I_{IN} (input current path) , max.	5 A
Feed current for I_{OUT} (output current path) , max.	5 A
Current consumption I_{IN} (power segment of the field bus coupler), typ.	116 mA
General data	
Weight	250 g
Dimensions H x W x D	120 mm / 52 mm / 76 mm
Note	A termination kit (UC20-EBK-ACC) is included in the controller package.

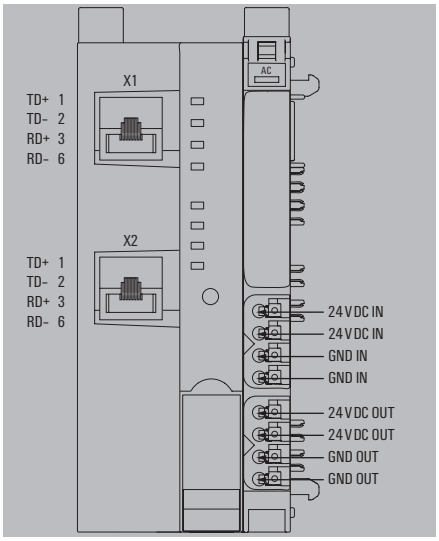

Ordering data

Module variants	Type	Qty.	Order No.
OpenLinux automation controller (Studio engineering)	UC20-SL2000-OLAC-EC	1	**2638920000**
Note			

Accessories

	Type	Qty.	Order No.
Coding elements	KOSM BHZ5.00	100	**1483050000**
SD Memory Card	SD-CARD-8GB	1	**2684400000**
Battery for real-time clock	BATTERY-CR1220-3V	1	**2684410000**
Termination kit	UR20-EBK-ACC	5	**1346610000**
Swievel marker	UR20-SM-ACC	20	**1339920000**
Connection marker for pusher custom printing	PM 2.7/2.6 MC SDR	192	**1323700000**
Connection marker for pusher neutral	PM 2.7/2.6 MC NE WS	960	**1323710000**
Module marker for custom printing	DEK 5/8-11.5 MC SDR	100	**1341610000**
Module marker for neutral	DEK 5/8-11.5 MC NE WS	500	**1341630000**
Thermotransfer version (Material: Polyester)	THM UR20 GE	1	**1429910000**
Thermotransfer version (material: polyester)	THM UR20 WS	1	**1429420000**
Paper version for Laserprinter	ESO UR20 DIN A4 WS	10	**1429430000**
USB cable (USB A to Micro USB)	IE-USB-A-MICRO-1.8M	1	**1487980000**
Engineering software			
u-create studio engineering software	U-CREATE-STUDIO	1	**2660130000**
Replacement parts			
Plug-in connector unit	UR20-PK-2674520000-SP	5	**2665170000**
Note			

UC20-WL2000-AC

- Automation controller
- Engineering tool u-create web
- System supply of 64 I/O modules
- 2 x 5 A current path

UC20-WL2000-AC

Technical data

System data	
Connection type	2 x RJ45 plug-in connectors
max. number of modules	64
Configuration interface	Micro USB 2.0
Processor	Dual Core ARM Cortex A9, 624 MHz, 512 Mbyte RAM
Memory (Flash)	4 GB, 32 GB via microSD
Real-time clock	Battery buffered
Engineering tool	u-create web
Supply	
Supply voltage for inputs	24 V DC +20 %/ -15 %
Supply voltage for outputs	24 V DC +20 %/ -15 %
Feed current for I_{IN} (input current path) , max.	5 A
Feed current for I_{OUT} (output current path) , max.	5 A
Current consumption I_{IN} (power segment of the field bus coupler), typ.	116 mA
General data	
Weight	329 g
Dimensions H x W x D	120 mm / 52 mm / 76 mm
Note	A termination kit (UC20-EBK-ACC) is included in the controller package.

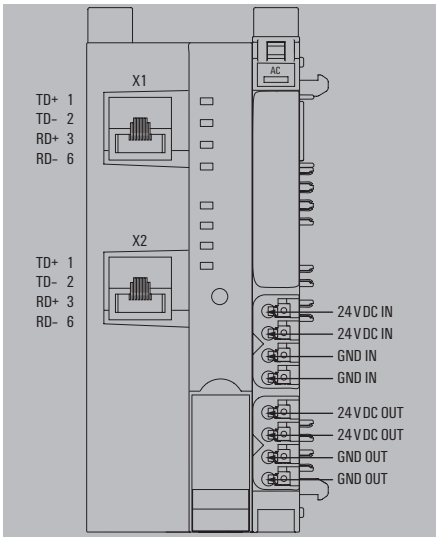

Ordering data

Module variants	Type	Qty.	Order No.
Automation controller (Web engineering)	UC20-WL2000-AC	1	**1334950000**
Note			

Accessories

	Type	Qty.	Order No.
Coding elements	KOSM BHZ5.00	100	**1483050000**
SD Memory Card	SD-CARD-8GB	1	**2684400000**
Battery for real-time clock	BATTERY-CR1220-3V	1	**2684410000**
Termination kit	UR20-EBK-ACC	5	**1346610000**
Swievel marker	UR20-SM-ACC	20	**1339920000**
Connection marker for pusher custom printing	PM 2.7/2.6 MC SDR	192	**1323700000**
Connection marker for pusher neutral	PM 2.7/2.6 MC NE WS	960	**1323710000**
Module marker for custom printing	DEK 5/8-11.5 MC SDR	100	**1341610000**
Module marker for neutral	DEK 5/8-11.5 MC NE WS	500	**1341630000**
Thermotransfer version (Material: Polyester)	THM UR20 GE	1	**1429910000**
Thermotransfer version (material: polyester)	THM UR20 WS	1	**1429420000**
Paper version for Laserprinter	ESO UR20 DIN A4 WS	10	**1429430000**
USB cable (USB A to Micro USB)	IE-USB-A-MICRO-1.8M	1	**1487980000**
Replacement parts			
Plug-in connector unit	UR20-PK-1334950000-SP	5	**2605360000**
Note			

UC20-WL2000-IOT

- Automation controller
- Engineering tool u-create IoT
- System supply of 64 I/O modules
- 2 x 5 A current path

UC20-WL2000-IOT

Technical data

System data	
Connection type	2 x RJ45 plug-in connectors
max. number of modules	64
Configuration interface	Micro USB 2.0
Processor	Dual Core ARM Cortex A9, 624 MHz, 512 Mbyte RAM
Memory (Flash)	4 GB, 32 GB via microSD
Real-time clock	Battery buffered
Engineering tool	u-create web
Supply	
Supply voltage for inputs	24 V DC +20 %/ -15 %
Supply voltage for outputs	24 V DC +20 %/ -15 %
Feed current for I_{IN} (input current path) , max.	5 A
Feed current for I_{OUT} (output current path) , max.	5 A
Current consumption I_{IN} (power segment of the field bus coupler), typ.	116 mA
General data	
Weight	329 g
Dimensions H x W x D	120 mm / 52 mm / 76 mm
Note	A termination kit (UC20-EBK-ACC) is included in the controller package.

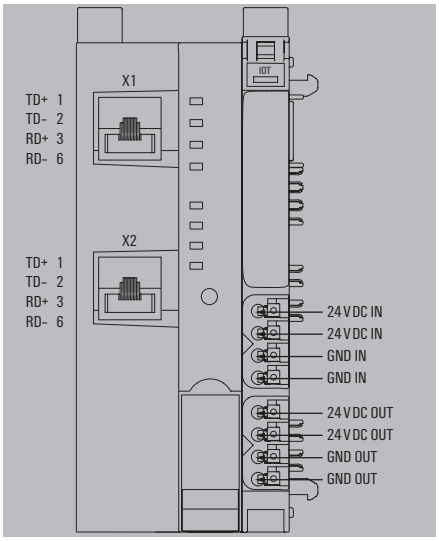

Ordering data

Module variants	Type	Qty.	Order No.
Automation controller (Web engineering)	UC20-WL2000-IOT	1	**1334990000**
Note			

Accessories

	Type	Qty.	Order No.
Coding elements	KOSM BHZ5.00	100	**1483050000**
SD Memory Card	SD-CARD-8GB	1	**2684400000**
Battery for real-time clock	BATTERY-CR1220-3V	1	**2684410000**
Termination kit	UR20-EBK-ACC	5	**1346610000**
Swievel marker	UR20-SM-ACC	20	**1339920000**
Connection marker for pusher custom printing	PM 2.7/2.6 MC SDR	192	**1323700000**
Connection marker for pusher neutral	PM 2.7/2.6 MC NE WS	960	**1323710000**
Module marker for custom printing	DEK 5/8-11.5 MC SDR	100	**1341610000**
Module marker for neutral	DEK 5/8-11.5 MC NE WS	500	**1341630000**
Thermotransfer version (Material: Polyester)	THM UR20 GE	1	**1429910000**
Thermotransfer version (material: polyester)	THM UR20 WS	1	**1429420000**
Paper version for Laserprinter	ESO UR20 DIN A4 WS	10	**1429430000**
USB cable (USB A to Micro USB)	IE-USB-A-MICRO-1.8M	1	**1487980000**
Replacement parts			
Plug-in connector unit	UR20-PK-1334990000-SP	5	**2605350000**
Note			

I/O system IP20
u-remote

I/O system IP20
u-remote

Introduction	B.2
Fieldbus coupler	B.4
Digital input modules	B.20
Digital output modules	B.36
Digital input and output modules	B.52
Pulse width modulation and stepper motor modules	B.54
Analogue input modules	B.58
Temperature modules and potentiometer input module	B.70
Strain gauge module	B.76
Power measurement module	B.78
Analogue output modules	B.80
Digital counter- and communication- modules	B.88
Safe I/O modules and safe power-feed modules	B.98
Power-feed modules	B.106
Accessories	B.110
System overview	B.114

Achieving maximum efficiency in the control cabinet

With great savings potential and optimum system performance

u-remote from Weidmüller is the reliable interface between field bus and field level in automation. The modular system is based on various components: a fieldbus coupler, up to 64 I/O modules, optional power-feed modules and a wealth of accessories, such as markers and terminating elements.

Integrated Safety

The fieldbus coupler is the central link between the various field bus standards and the u-remote system bus. At the same time, up to 64 I/O modules are supplied via its integrated power contacts. The well-engineered technology of the connection system enables 2 x 10 A to be supplied for the input and output modules and the system voltage to be fully supplied through the fieldbus coupler. Every fieldbus coupler provides direct access to the u-remote system via a web server without additional software having to be installed. This means that the system can be parameterised and its configuration checked. Inputs and outputs can also be checked or influenced. The connection may take the form of an Ethernet-based field bus or micro USB. The u-remote fieldbus couplers are integrated in the standard simple manner. The corresponding development environments of the control systems and the device description files available online, e.g. GSD, ESD, EDS oder XML, can be used to easily perform the necessary settings.

The modularly structured I/O modules are unique in that they allow the sensor and actuator wiring to be designed in both a robust and plug-in manner. This allows the electronics to be replaced at any time even with permanent wiring. This achieves an invaluable time saving, in terms of both wiring inaccessible cabinets and rapidly replacing sensors. Thanks to the “PUSH IN” technology for up to 1.5 mm2, in their narrowest form of 11.5 mm, the modularly structured u-remote I/O modules can be used for all sensor and actuator connections with a very high connection density. A clear status and diagnosis display on the connection also ensures rapid and precise checks for individual sensors and actuators.

More intelligent automation more easily specified:
u-remote facilitates your planning and offers unique functions.

Innovative functions for more efficient automation solutions
With u-remote, Weidmüller has completely rethought the I/O technology for IP20 environments. You can thus expect a system that is full of clever details and allows you to install innovative, cost-saving and easy-to-handle automation solutions in your project.

Why waste space?
Design your cabinets one size smaller: u-remote, with the highest connection density on a module, offers you the most slender module width and a far lower space requirement for power-feed modules - an unrivaled channel density and extremely flexible design options.

Simply plug and go
The plug-in connection level allows sensors and actuators to be connected with pre-assembled cables. This means improved time benefits, better handling, and minimises the number of mistakes in system wiring. Decentralised automation modules in particular are so very easy to transfer into productive operation.

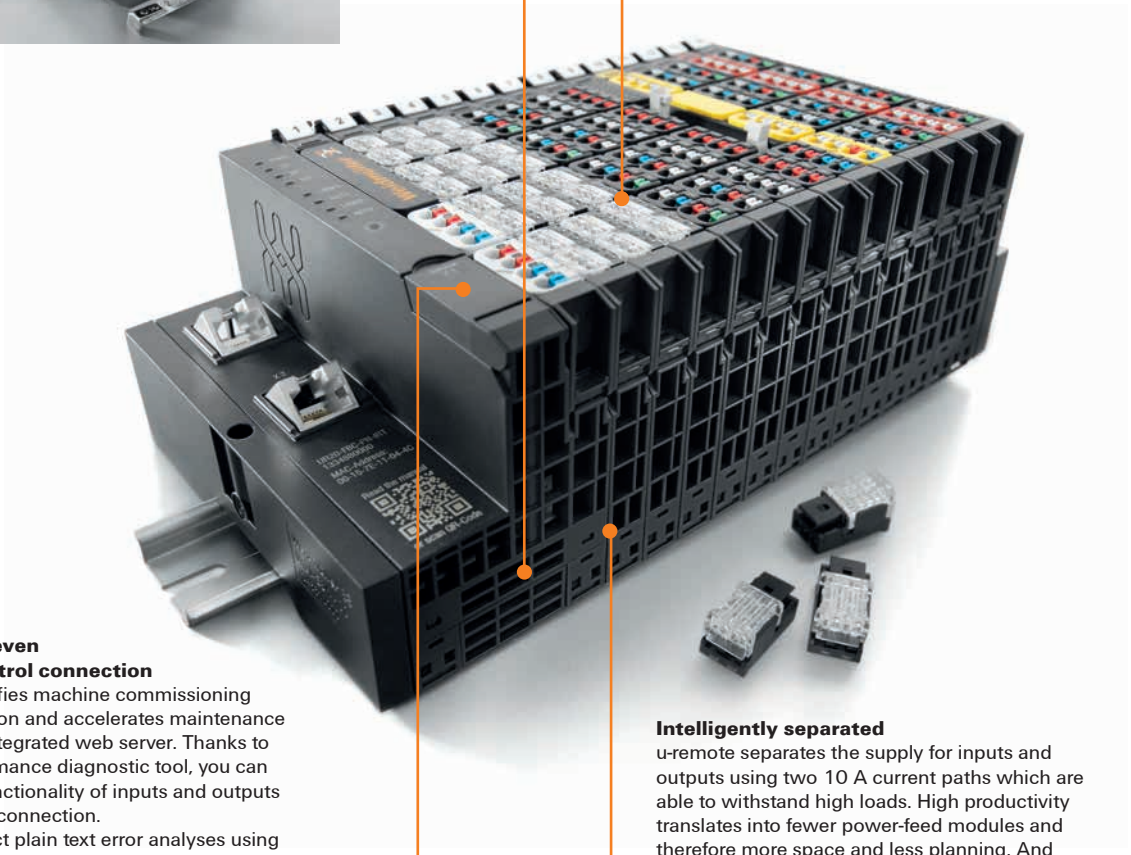

Diagnostics, even without a control connection
u-remote simplifies machine commissioning section-by-section and accelerates maintenance work with its integrated web server. Thanks to the high performance diagnostic tool, you can simulate the functionality of inputs and outputs prior to control connection.
You can conduct plain text error analyses using any standard browser – whether you're working on-site or remotely.

Intelligently separated
u-remote separates the supply for inputs and outputs using two 10 A current paths which are able to withstand high loads. High productivity translates into fewer power-feed modules and therefore more space and less planning. And your system can be quickly maintained while retaining full diagnostic capability, as inputs and outputs can be switched off independently of one another.

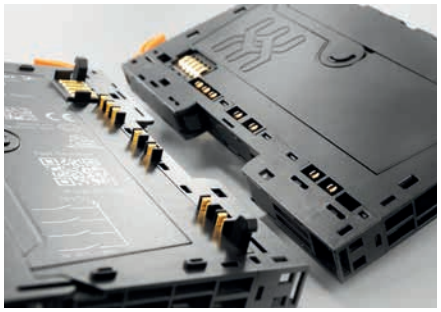

PROFIBUS fieldbus coupler

DP-V1; Web server tool; Sub-D connection

In automation technology, the PROFIBUS-DP standard enables the controlled incorporation of sensors and actuators via one central control unit.
The UR20-FBC-PB-DP-V2 fieldbus coupler is a PROFIBUS-DP-V1 participant certified by the Profibus user organisation. With options for connecting up to 64 u-remote participants, it serves as the head module for the u-remote system bus. The PROFIBUS-DP coupler has a Sub-D plug-in connector and supports all services according to the DP-V1 specification. Two rotary coding switches are used to address individual PROFIBUS participants.

The coupler can be activated with a system-independent web server application via the USB service interface. All information, such as diagnoses, status values and parameters, can therefore be read out. All connected inputs can also be simulated or outputs set. The initial system power supply is already integrated in the fieldbus coupler. Power is supplied via two 4-pin connectors, separated into the input and output current paths.

Since the PROFIBUS-DP products from Weidmüller make full use of all the latest technological possibilities, such as GSD files and diagnosis messages, they actively support your application in the most important tasks – from engineering and commissioning fault diagnosis.

More Performance. Simplified.

Block diagram PROFIBUS fieldbus coupler

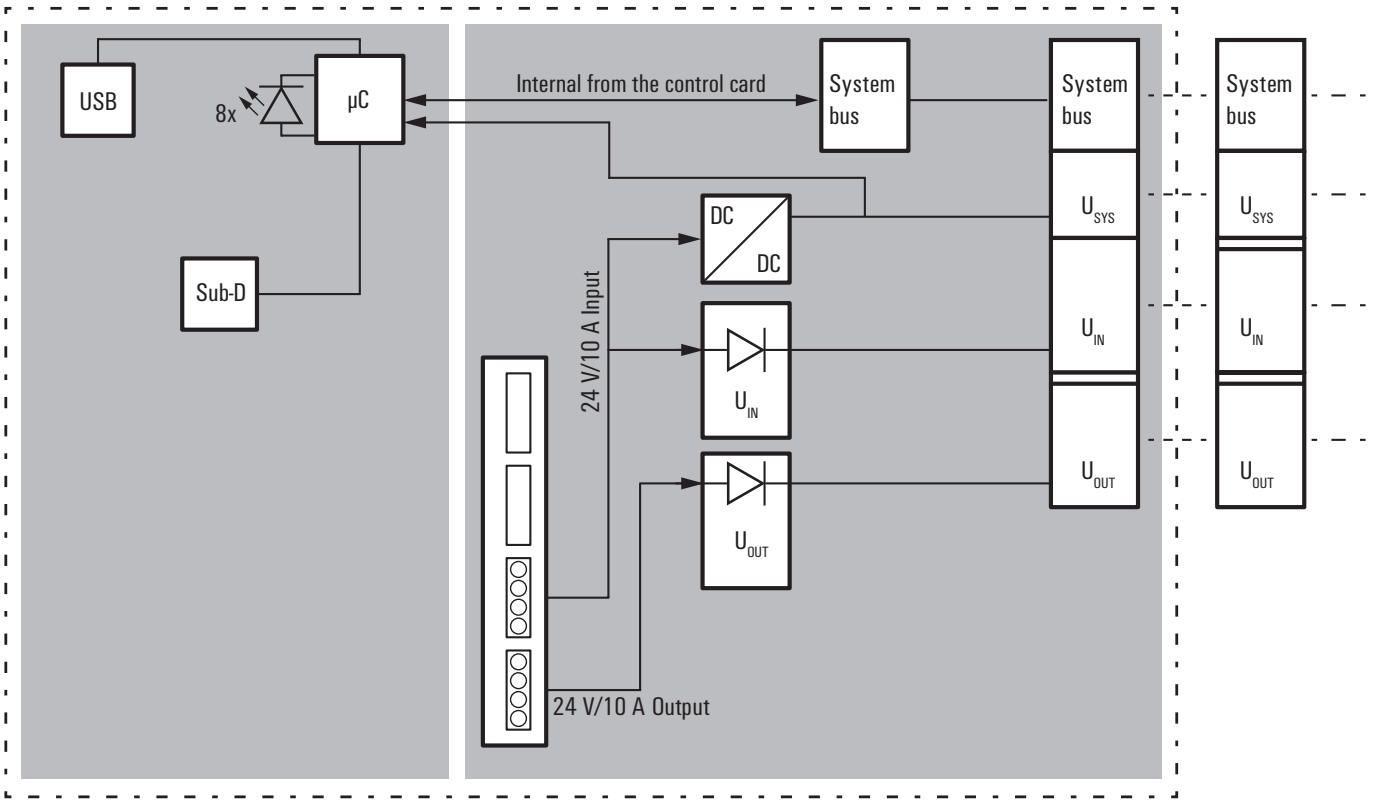

PROFIBUS

- 2 x 10 A current paths
- Address can be set using rotary switch
- Web server
- System supply of 64 I/O modules
- Temperature range -20... +60 °C
- PROFIBUS DP-V1 up to 12 MBaud

UR20-FBC-PB-DP-V2

Technical data

System data	
Connection type	9-pole SUB-D socket (female)
Field bus protocol	PROFIBUS DP-V1
Process data	488 Byte
Parameter data	244 Byte
Diagnostic data	244 Byte
max. number of modules	64
Configuration interface	Micro USB 2.0
Transmission rate of field bus, max.	12 Mbit/s
Transmission speed of system bus, max.	48 Mbit
Supply	
Supply voltage for inputs	24 V DC +20 %/ -15 %
Supply voltage for outputs	24 V DC +20 %/ -15 %
Feed current for I_{IN} (input current path) , max.	10 A
Feed current for I_{OUT} (output current path) , max.	10 A
Current consumption I_{IN} (power segment of the field bus coupler), typ.	90 mA
General data	
Weight	247 g
Dimensions H x W x D	120 mm / 52 mm / 76 mm
Note	Download of GSD-file on www.weidmueller.com

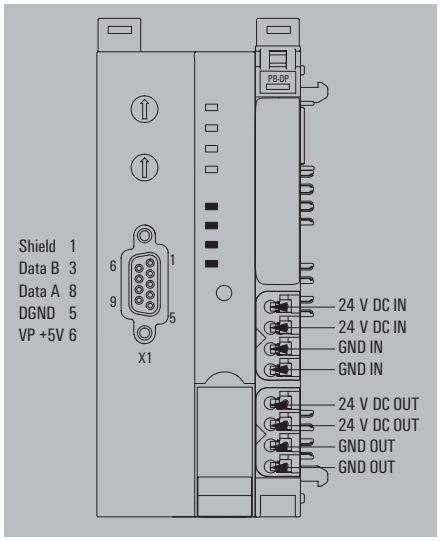

Ordering data

Module variants	Type	Qty.	Order No.
Field bus coupler, Profibus DP-V1	UR20-FBC-PB-DP-V2	1	**2614380000**
Note	A termination kit (UR20-EBK-ACC) is included in the coupler package		

Accessories

	Type	Qty.	Order No.
Termination kit	UR20-EBK-ACC	5	**1346610000**
Swivel marker	UR20-SM-ACC	20	**1339920000**
Connection marker for pusher neutral	PM 2.7/2.6 MC NE WS	960	**1323710000**
Connection marker for pusher custom printing	PM 2.7/2.6 MC SDR	192	**1323700000**
Module marker for neutral	DEK 5/8-11.5 MC NE WS	500	**1341630000**
Module marker for custom printing	DEK 5/8-11.5 MC SDR	100	**1341610000**
USB cable (USB A to Micro USB)	IE-USB-A-MICRO-1.8M	1	**1487980000**
Replacement parts			
Plug-in connector unit	UR20-PK-2614380000-SP	5	**2623120000**
Note	1 roll = 1000 labels = 1 Qty. 1 sheet = 60 labels = 1 unit		

Product standard	IEC 61131-2
EMC	EN 61000
ATEX	EN 60079
UL	UL 61010-2-201
MSIP	MSIP-REM-WMG-2614380000

PROFINET field bus coupler

Web server tool; two RJ45 ports; 100 Mbps

PROFINET is gaining in importance as a rapidly growing Industrial Ethernet Standard. By supporting real-time functionality (RT) and isochronous real-time functionality (IRT), the technology complies with modern system and application requirements to a large extent. The UR20-FBC-PN-IRT-V2 field bus coupler is a PROFINET-IRT participant certified by the PROFIBUS user organisation. It is able to connect up to 64 u-remote participants and two Ethernet ports with integrated switch to implement a line network structure.

The coupler can be activated with a system-independent web server application via the USB service interface or the Ethernet ports. All information, such as diagnoses, status values and parameters, can therefore be read out. All connected inputs can also be simulated or outputs set. The initial system power supply is already integrated in the field bus coupler. Power is supplied via two 4-pin connectors, separated into the input and output current paths.

Since the PROFINET products from Weidmüller make full use of all the latest technological possibilities, such as GSDML files and diagnosis messages, they actively support your application in the most important tasks – from engineering and commissioning to faults.

More Performance. Simplified.

Block diagram PROFINET fieldbus coupler

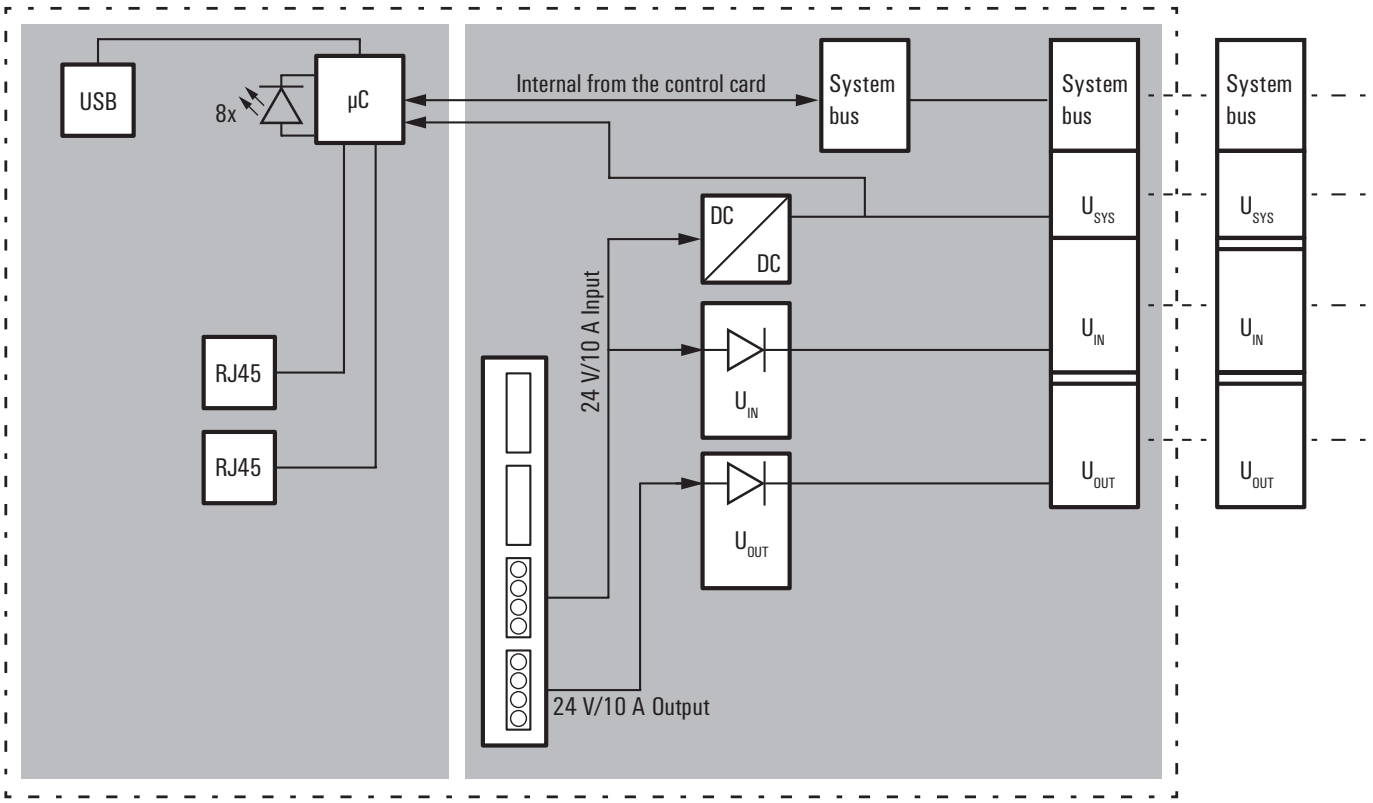

PROFINET

- 2 x 10 A current paths
- Web server
- System supply of 64 I/O modules
- Temperature range –20... +60 °C
- PROFINET IRT/RT capable
- PROFINET diagnosis
- LLDP – Neighborhood detection

UR20-FBC-PN-IRT-V2

Technical data

System data	
Connection type	2 x RJ45 plug-in connectors
Field bus protocol	PROFINET IRT
Process data	1024 Byte
Parameter data	1485 Byte
Diagnostic data	1485 Byte
Fast Startup	Yes
max. number of modules	64
Configuration interface	Micro USB 2.0
Transmission rate of field bus, max.	100 Mbit/s
Transmission speed of system bus, max.	48 Mbit/s
Supply	
Supply voltage for inputs	24 V DC +20 %/ -15 %
Supply voltage for outputs	24 V DC +20 %/ -15 %
Feed current for I_{IN} (input current path) , max.	10 A
Feed current for I_{OUT} (output current path) , max.	10 A
Current consumption I_{IN} (power segment of the field bus coupler), typ.	100 mA
General data	
Weight	247 g
Dimensions H x W x D	120 mm / 52 mm / 76 mm
Note	Download of GSDML-file on www.weidmueller.com

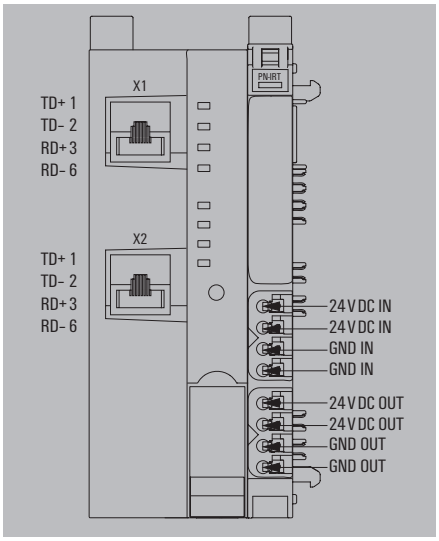

Ordering data

Module variants	Type	Qty.	Order No.
Field bus coupler, PROFINET IRT	UR20-FBC-PN-IRT-V2	1	**2566380000**
Note	A termination kit (UR20-EBK-ACC) is included in the coupler package		

Accessories

	Type	Qty.	Order No.
Coding elements	KOSM BHZ5.00	100	**1483050000**
Termination kit	UR20-EBK-ACC	5	**1346610000**
Swievel marker	UR20-SM-ACC	20	**1339920000**
Connection marker for pusher custom printing	PM 2.7/2.6 MC SDR	192	**1323700000**
Connection marker for pusher neutral	PM 2.7/2.6 MC NE WS	960	**1323710000**
Module marker for custom printing	DEK 5/8-11.5 MC SDR	100	**1341610000**
Module marker for neutral	DEK 5/8-11.5 MC NE WS	500	**1341630000**
Thermotransfer version (Material: Polyester)	THM UR20 GE	1	**1429910000**
Thermotransfer version (material: polyester)	THM UR20 WS	1	**1429420000**
Paper version for Laserprinter	ESO UR20 DIN A4 WS	10	**1429430000**
USB cable (USB A to Micro USB)	IE-USB-A-MICRO-1.8M	1	**1487980000**
Replacement parts			
Plug-in connector unit	UR20-PK-2566380000-SP	5	**2623640000**
Note	1 roll = 1000 labels = 1 Qty. 1 sheet = 60 labels = 1 unit		

Product standard	IEC 61131-2
EMC	EN 61000
ATEX	EN 60079
UL	UL 61010-2-201
MSIP	MSIP-REM-WMG-2566380000

ABS (American Bureau of Shipping)
BSH (Federal Maritime and Hydrographic Agency of Germany)
BV (Bureau Veritas)
DNV GL (Det Norske Veritas) (Germanischer Lloyd)
LR (Lloyd's Register)
RINA (Registro Italiano Navale)

EtherCAT field bus coupler

Web server tool; two RJ45 ports; 10/100 Mbps

EtherCAT is a popular field bus standard for systems with stringent time requirements. The UR20-FBC-EC field bus coupler is an EtherCAT participant certified by the EtherCAT Technology Group. With options for connecting up to 64 u-remote participants, it serves as the head module for the u-remote system bus. The EtherCAT coupler has two Ethernet ports with integrated switch for implementing a line network structure.

The coupler can be activated with a system-independent web server application via the USB service interface or the Ethernet ports. All information, such as diagnoses, status values and parameters, can therefore be read out. All connected inputs can also be simulated or outputs set. The system's initial power supply is already integrated in the field bus coupler. Power is supplied via two 4-pin connectors, separated into the input and output current paths.

Since the EtherCAT products from Weidmüller make full use of all the latest technological possibilities, such as use of XML files, they actively support your application in the most important tasks – from engineering and commissioning to fault diagnosis.

More Performance. Simplified.

Block diagram EtherCAT fieldbus coupler

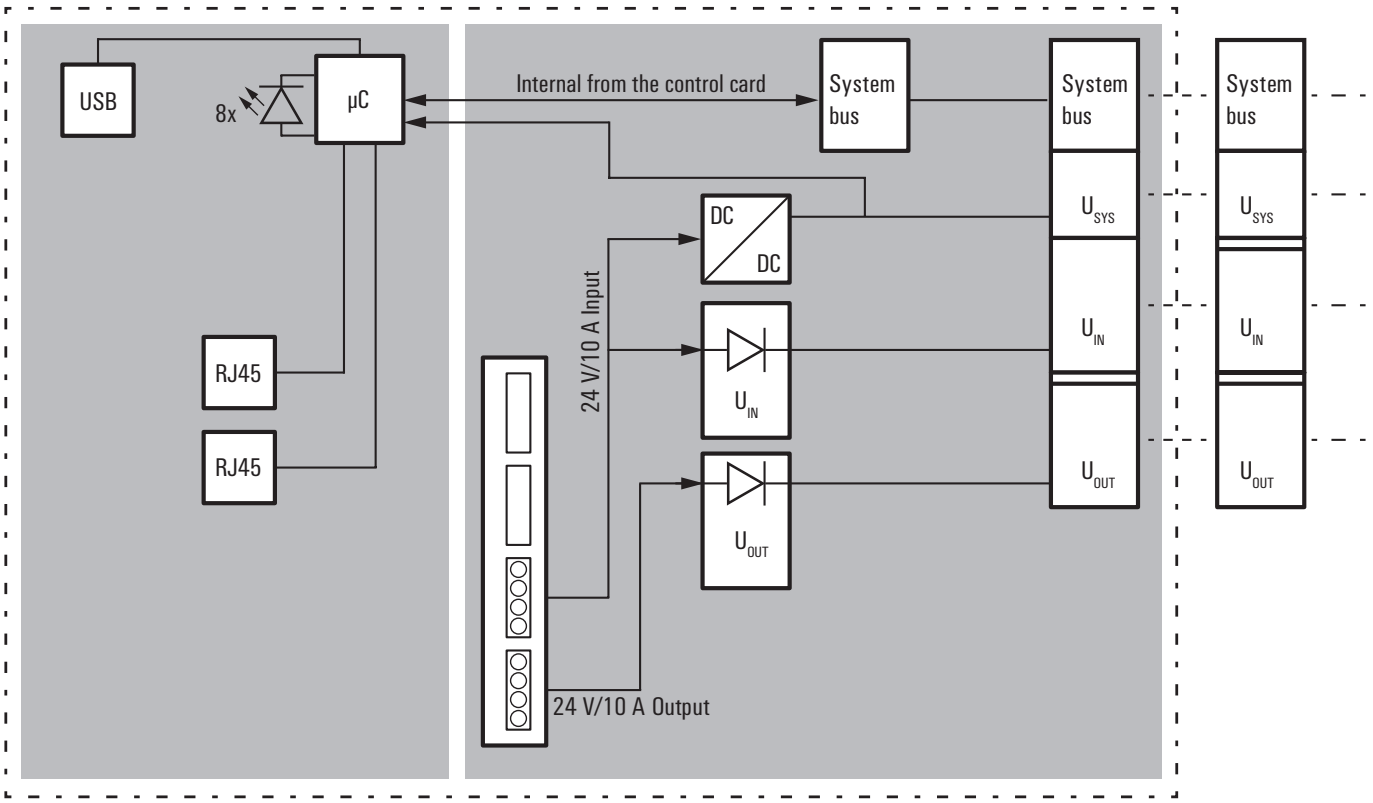

EtherCAT

- 2 x 10 A current path
- Web server
- System supply for 64 I/O modules
- Temperature range: -20... +60 °C
- Various EtherCAT services

UR20-FBC-EC

Technical data

System data	
Connection type	2 x RJ45 plug-in connectors
Field bus protocol	EtherCAT
Process data	1024 Byte
Parameter data	4 kByte
Diagnostic data	3200 Byte
max. number of modules	64
Configuration interface	Micro USB 2.0
Transmission rate of field bus, max.	100 Mbit/s
Transmission speed of system bus, max.	48 Mbit/s
Supply	
Supply voltage for inputs	24 V DC +20 %/ -15 %
Supply voltage for outputs	24 V DC +20 %/ -15 %
Feed current for I_{IN} (input current path) , max.	10 A
Feed current for I_{OUT} (output current path) , max.	10 A
Current consumption I_{IN} (power segment of the field bus coupler), typ.	130 mA
General data	
Weight	227 g
Dimensions H x W x D	120 mm / 52 mm / 76 mm
Note	Download of ESI-file on www.weidmueller.com

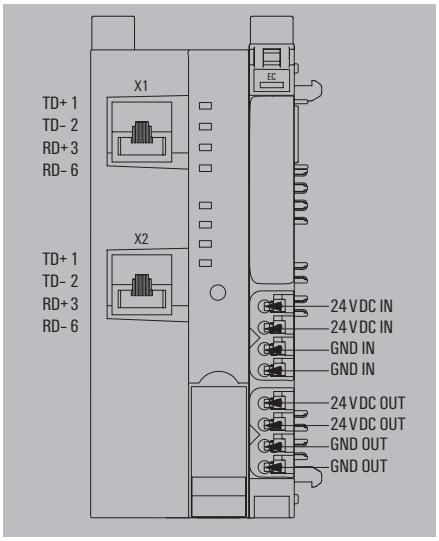

Product standard	IEC 61131-2
EMC	EN 61000
ATEX	EN 60079
UL	UL 61010-2-201
MSIP	MSIP-REM-WMG-1334910000

ABS (American Bureau of Shipping)
BSH (Federal Maritime and Hydrographic Agency of Germany)
BV (Bureau Veritas)
DNV GL (Det Norske Veritas) (Germanischer Lloyd)
LR (Lloyd's Register)
RINA (Registro Italiano Navale)

Ordering data

Module variants	Type	Qty.	Order No.
Field bus coupler, EtherCAT	UR20-FBC-EC	1	**1334910000**
Note	A termination kit (UR20-EBK-ACC) is included in the coupler package		

Accessories

	Type	Qty.	Order No.
Coding elements	KOSM BHZ5.00	100	**1483050000**
Termination kit	UR20-EBK-ACC	5	**1346610000**
Swievel marker	UR20-SM-ACC	20	**1339920000**
Connection marker for pusher custom printing	PM 2.7/2.6 MC SDR	192	**1323700000**
Connection marker for pusher neutral	PM 2.7/2.6 MC NE WS	960	**1323710000**
Module marker for custom printing	DEK 5/8-11.5 MC SDR	100	**1341610000**
Module marker for neutral	DEK 5/8-11.5 MC NE WS	500	**1341630000**
Thermotransfer version (Material: Polyester)	THM UR20 GE	1	**1429910000**
Thermotransfer version (material: polyester)	THM UR20 WS	1	**1429420000**
Paper version for Laserprinter	ESO UR20 DIN A4 WS	10	**1429430000**
USB cable (USB A to Micro USB)	IE-USB-A-MICRO-1.8M	1	**1487980000**
Replacement parts			
Plug-in connector unit	UR20-PK-1334910000-SP	5	**1484440000**
Note	1 roll = 1000 label = 1 Qty. 1 sheet = 60 label = 1 Qty.		

ModbusTCP field bus coupler

Web server tool; two RJ45 ports; 10/100 Mbps

ModbusTCP

System safety around the globe is provided by the ModbusTCP version, which is stated in IEC 61158 as an Industrial Ethernet Standard. The UR20-FBC-MOD-TCP-V2 from Weidmüller is a field bus coupler designed in accordance with IEC 61158. With options for connecting up to 64 u-remote participants, it serves as the head module for the u-remote system bus.

The coupler can be activated with a system-independent web server application via the USB service interface or the Ethernet ports. All information, such as diagnoses, status values and parameters, can therefore be read out. All connected inputs can also be simulated or outputs set. The system's initial power supply is already integrated in the field bus coupler. Power is supplied via two 4-pin connectors, separated into the input and output current paths.

Since the ModbusTCP products from Weidmüller make full use of all the latest technological possibilities, such as diagnosis options, they actively support your application in the most important tasks – from engineering and commissioning to fault diagnosis.

More Performance. Simplified.

Block diagram Modbus TCP fieldbus coupler

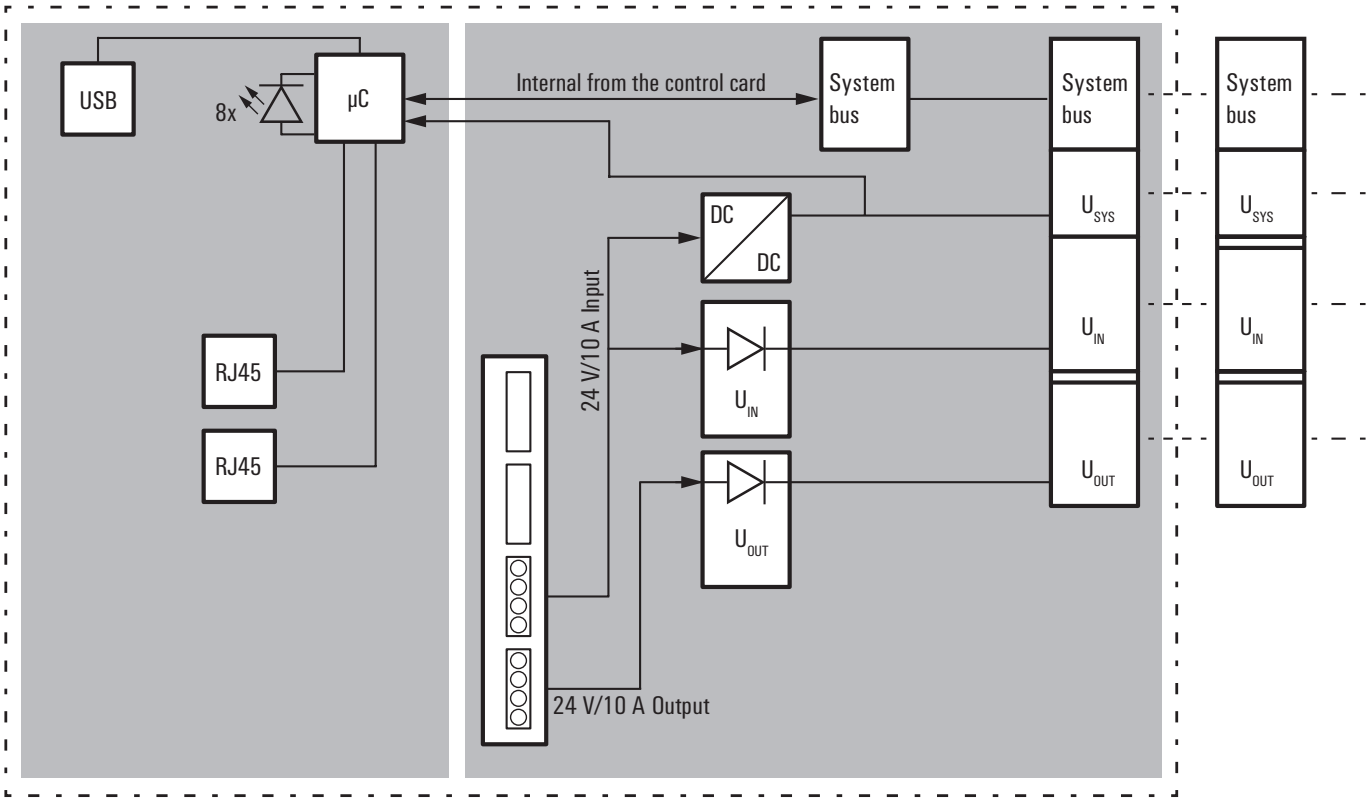

ModbusTCP

- Dual LAN mode
- 2 x 10 A current path
- Various Modbus services
- Web server
- System supply for 64 I/O modules
- Temperature range: -20... +60 °C

UR20-FBC-MOD-TCP-V2

Technical data

System data	
Connection type	2 x RJ45 plug-in connectors
Field bus protocol	Modbus/TCP
Process data	8 kByte
Parameter data	1024 Byte
Diagnostic data	1024 Byte
max. number of modules	64
Configuration interface	Micro USB 2.0
Transmission rate of field bus, max.	100 Mbit/s
Transmission speed of system bus, max.	48 Mbit/s
Supply	
Supply voltage for inputs	24 V DC +20 %/ -15 %
Supply voltage for outputs	24 V DC +20 %/ -15 %
Feed current for I_{IN} (input current path) , max.	10 A
Feed current for I_{OUT} (output current path) , max.	10 A
Current consumption I_{IN} (power segment of the field bus coupler), typ.	112 mA
General data	
Weight	223 g
Dimensions H x W x D	120 mm / 52 mm / 76 mm
Note	

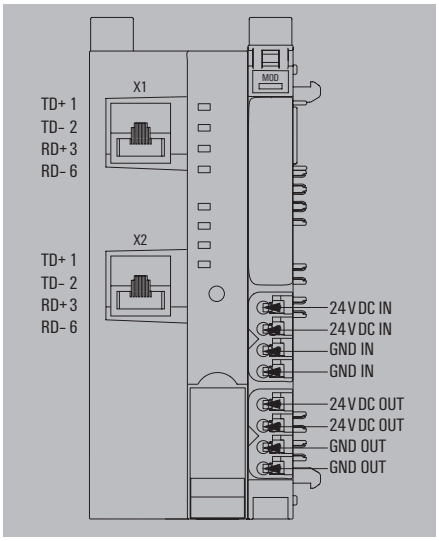

Ordering data

Module variants	Type	Qty.	Order No.
Fieldbus coupler, ModbusTCP	UR20-FBC-MOD-TCP-V2	1	2476450000
Note	A termination kit (UR20-EBK-ACC) is included in the coupler package		

Accessories

	Type	Qty.	Order No.
Coding elements	KOSM BHZ5.00	100	1483050000
Termination kit	UR20-EBK-ACC	5	1346610000
Swievel marker	UR20-SM-ACC	20	1339920000
Connection marker for pusher custom printing	PM 2.7/2.6 MC SDR	192	1323700000
Connection marker for pusher neutral	PM 2.7/2.6 MC NE WS	960	1323710000
Module marker for custom printing	DEK 5/8-11.5 MC SDR	100	1341610000
Module marker for neutral	DEK 5/8-11.5 MC NE WS	500	1341630000
Thermotransfer version (Material: Polyester)	THM UR20 GE	1	1429910000
Thermotransfer version (material: polyester)	THM UR20 WS	1	1429420000
Paper version for Laserprinter	ESO UR20 DIN A4 WS	10	1429430000
USB cable (USB A to Micro USB)	IE-USB-A-MICRO-1.8M	1	1487980000
Replacement parts			
Plug-in connector unit	UR20-PK-2476450000-SP	5	2485280000
Note	1 roll = 1000 labels = 1 Qty. 1 sheet = 60 labels = 1 unit		

Product standard	IEC 61131-2
EMC	EN 61000
ATEX	EN 60079
UL	UL 61010-2-201
MSIP	MSIP-REM-WMG-2476450000

ABS (American Bureau of Shipping)
BSH (Federal Maritime and Hydrographic Agency of Germany)
BV (Bureau Veritas)
DNV GL (Det Norske Veritas) (Germanischer Lloyd)
LR (Lloyd's Register)
RINA (Registro Italiano Navale)

EtherNet/IP field bus coupler

Web server tool; two RJ45 Ports; 100 Mbps

EtherNet/IP™ is a widespread, real-time capable Industrial Ethernet fieldbus system.
It is based on standard Ethernet technology such as TCP and UDP so it provides in addition to the transmission of unicast messages between two participants, the possibility of sending I/O data via multicast cyclically to multiple recipients. The UR20-FBC-EIP from Weidmüller is a field bus coupler designed in accordance with IEC 61158 and is an EtherNet/IP participant. With options for connecting up to 64 u-remote participants, it serves as the head module for the u-remote system bus.

The coupler can be activated with a system-independent web server application via the USB service interface or the Ethernet ports. All information such as diagnoses, status values and parameters can therefore be read out. All connected inputs can also be simulated or outputs set. The system's initial power supply is already integrated in the field bus coupler. Power is supplied via two 4-pin connectors, separated into the input and output current paths.

Since the EtherNet/IP products from Weidmüller make full use of all the latest technological possibilities, such as diagnosis options, they actively support your application in the most important tasks – from engineering and commissioning to fault diagnosis.

More Performance. Simplified.

Block diagram Ethernet/IP fieldbus coupler

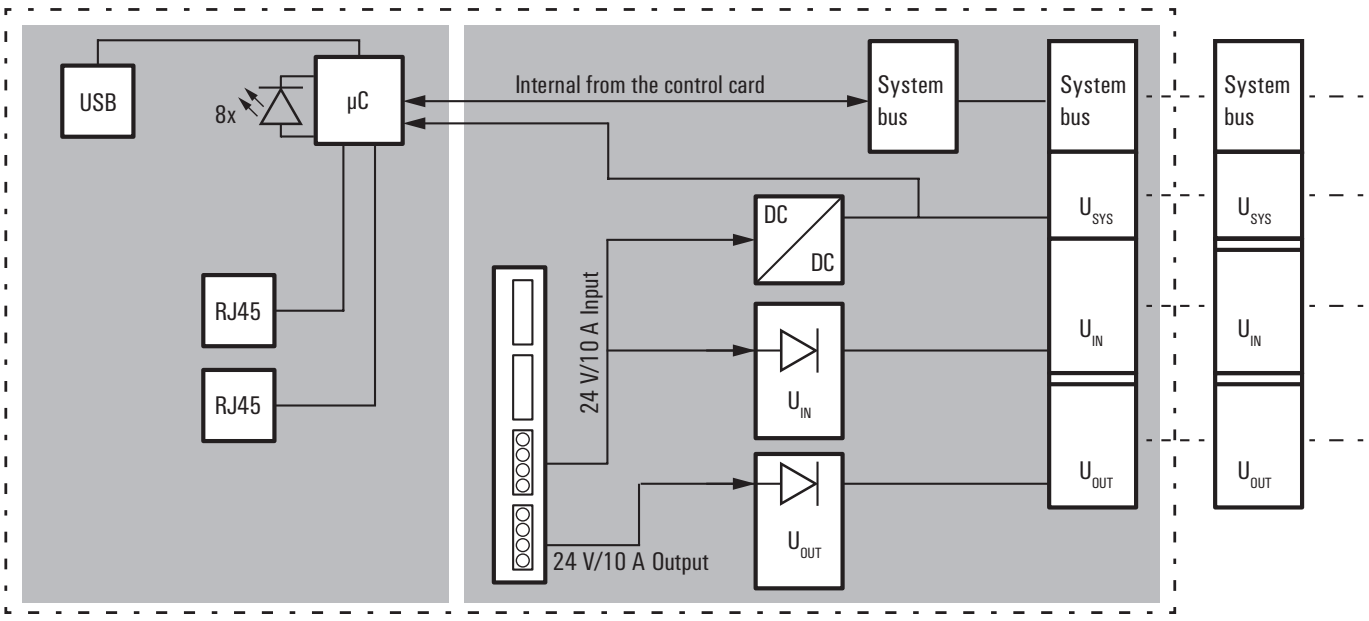

EtherNet/IP

- 2 x 10 A current path
- Web server
- System supply for 64 I/O modules
- Temperature range: -20... +60 °C

UR20-FBC-EIP

Technical data

System data	
Connection type	2 x RJ45 plug-in connectors
Field bus protocol	EtherNet/IP
Process data	988 Byte
Parameter data	4 kByte
Diagnostic data	3008 Byte
max. number of modules	64
Configuration interface	Micro USB 2.0
Transmission rate of field bus, max.	100 Mbit/s
Transmission speed of system bus, max.	48 Mbit/s
Supply	
Supply voltage for inputs	24 V DC +20 %/ -15 %
Supply voltage for outputs	24 V DC +20 %/ -15 %
Feed current for I_{IN} (input current path) , max.	10 A
Feed current for I_{OUT} (output current path) , max.	10 A
Current consumption I_{IN} (power segment of the field bus coupler), typ.	112 mA
General data	
Weight	223 g
Dimensions H x W x D	120 mm / 52 mm / 76 mm
Note	Download of EDS-file on www.weidmueller.com

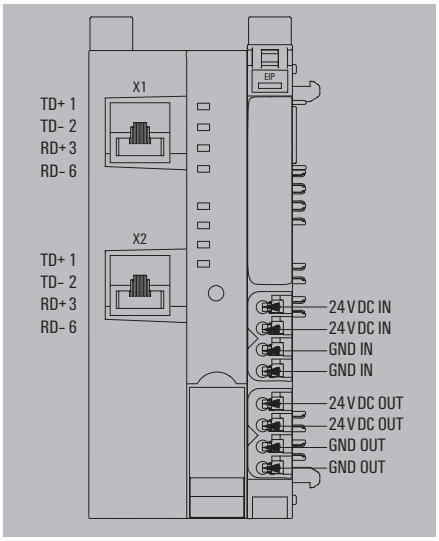

Ordering data

Module variants	Type	Qty.	Order No.
Field bus coupler, EtherNet/IP	UR20-FBC-EIP	1	1334920000
Note	A termination kit (UR20-EBK-ACC) is included in the coupler package		

Accessories

	Type	Qty.	Order No.
Coding elements	KOSM BHZ5.00	100	1483050000
Termination kit	UR20-EBK-ACC	5	1346610000
Swievel marker	UR20-SM-ACC	20	1339920000
Connection marker for pusher custom printing	PM 2.7/2.6 MC SDR	192	1323700000
Connection marker for pusher neutral	PM 2.7/2.6 MC NE WS	960	1323710000
Module marker for custom printing	DEK 5/8-11.5 MC SDR	100	1341610000
Module marker for neutral	DEK 5/8-11.5 MC NE WS	500	1341630000
Thermotransfer version (Material: Polyester)	THM UR20 GE	1	1429910000
Thermotransfer version (material: polyester)	THM UR20 WS	1	1429420000
Paper version for Laserprinter	ESO UR20 DIN A4 WS	10	1429430000
USB cable (USB A to Micro USB)	IE-USB-A-MICRO-1.8M	1	1487980000
Replacement parts			
Plug-in connector unit	UR20-PK-1334920000-SP	5	1541290000
Note	1 roll = 1000 label = 1 Qty. 1 sheet = 60 label = 1 Qty.		

Product standard	IEC 61131-2
EMC	EN 61000
ATEX	EN 60079
UL	UL 61010-2-201
MSIP	MSIP-REM-WMG-1334920000

ABS (American Bureau of Shipping)
BSH (Federal Maritime and Hydrographic Agency of Germany)
BV (Bureau Veritas)
DNV GL (Det Norske Veritas) (Germanischer Lloyd)
LR (Lloyd's Register)
RINA (Registro Italiano Navale)

DeviceNet field bus coupler

Web server tool;
PCB plug-in connector

DeviceNet is a serial, CAN-based fieldbus system, which was developed by Allen-Bradley and later on passed as an open standard to the ODVA (Open DeviceNet Vendor Association). Today it is used worldwide in automation technology. Classical can DeviceNet operated with a maximum of 64 network nodes per fieldbus segment. The fieldbus coupler UR20-FBC-DN is connected via a 5-pin PCB connector to the network. With options for connecting up to 64 u-remote participants, it serves as the head module for the u-remote system bus.

The coupler can be activated with a system-independent web server application via the USB service interface. All information, such as diagnoses, status values and parameters, can therefore be read out. All connected inputs can also be simulated or outputs set. The initial system power supply is already integrated in the field bus coupler. Power is supplied via two 4-pin connectors, separated into the input and output current paths.

Since the DeviceNet products from Weidmüller make full use of all the latest technological possibilities, such as diagnosis options, they actively support your application in the most important tasks – from engineering and commissioning to fault diagnosis.

More Performance. Simplified.

Block diagram DeviceNet fieldbus coupler

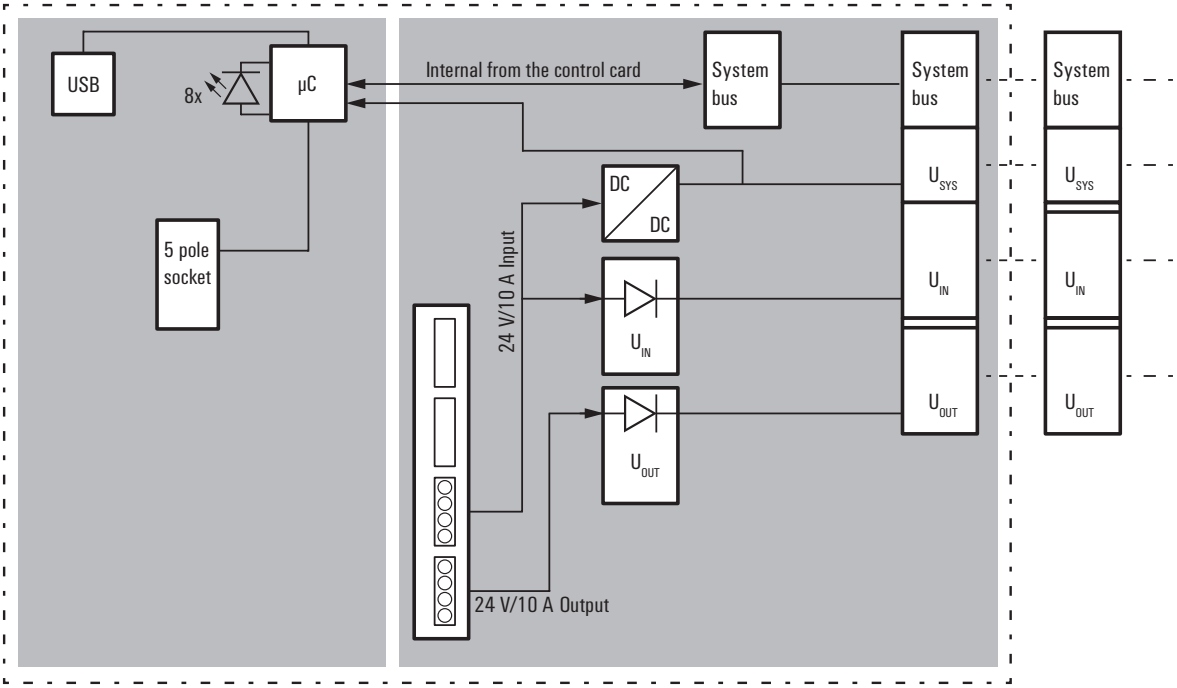

DeviceNet

- 2 x 10 A current path
- Web server
- System supply for 64 I/O modules
- Temperature range: -20... +60 °C

UR20-FBC-DN

Technical data

System data	
Connection type	Connection socket for 5-pin PCB connector
Field bus protocol	DeviceNet
Process data	1008 Byte
Parameter data	4 kByte
Diagnostic data	3008 Byte
max. number of modules	64
Configuration interface	Micro USB 2.0
Transmission rate of field bus, max.	500 kbit/s
Transmission speed of system bus, max.	48 Mbit/s
Supply	
Supply voltage for inputs	24 V DC +20 %/ -15 %
Supply voltage for outputs	24 V DC +20 %/ -15 %
Feed current for I_{IN} (input current path) , max.	10 A
Feed current for I_{OUT} (output current path) , max.	10 A
Current consumption I_{IN} (power segment of the field bus coupler), typ.	75 mA (+15 mA from DeviceNet supply)
General data	
Weight	219 g
Dimensions H x W x D	120 mm / 52 mm / 76 mm
Note	Download of EDS-file on www.weidmueller.com

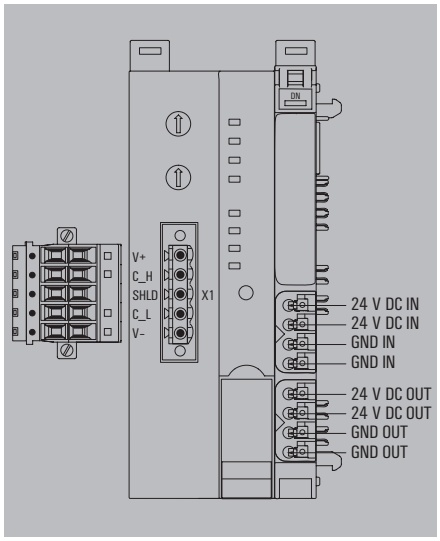

Product standard	IEC 61131-2
EMC	EN 61000
ATEX	EN 60079
UL	UL 61010-2-201
MSIP	MSIP-REM-WMG-1334900000

Ordering data

Module variants	Type	Qty.	Order No.
Field bus coupler, DeviceNet	UR20-FBC-DN	1	1334900000
Note	A termination kit (UR20-EBK-ACC) is included in the coupler package		

Accessories

	Type	Qty.	Order No.
Coding elements	KOSM BHZ5.00	100	1483050000
Termination kit	UR20-EBK-ACC	5	1346610000
Swievel marker	UR20-SM-ACC	20	1339920000
Connection marker for pusher custom printing	PM 2.7/2.6 MC SDR	192	1323700000
Connection marker for pusher neutral	PM 2.7/2.6 MC NE WS	960	1323710000
Module marker for custom printing	DEK 5/8-11.5 MC SDR	100	1341610000
Module marker for neutral	DEK 5/8-11.5 MC NE WS	500	1341630000
Thermotransfer version (Material: Polyester)	THM UR20 GE	1	1429910000
Thermotransfer version (material: polyester)	THM UR20 WS	1	1429420000
Paper version for Laserprinter	ESO UR20 DIN A4 WS	10	1429430000
USB cable (USB A to Micro USB)	IE-USB-A-MICRO-1.8M	1	1487980000
PCB plug-in connector, socket plug, 5 pole, 10 pin	BLDZ DN5.08/05/180F GY BX PRT	50	1919990000
PCB plug-in connector, socket plug, 5 pole, 5 pin	BLZ DN 5.08/05/180F AU GY BX PRT	50	1933550000
Replacement parts			
Plug-in connector unit	UR20-PK-1334900000-SP	5	2003540000
Note	1 roll = 1000 label = 1 Qty. 1 sheet = 60 label = 1 Qty.		

CAN field bus coupler
Web server tool; Sub-D connection

The CAN bus (Controller Area Network) is a serial fieldbus, which was introduced in 1983 by Bosch and Intel. Due to the good characteristics it is particularly suitable for applications where high data security is required. The fieldbus coupler UR20-FBC-CAN uses the CAN based Layer 7 communication protocol CANopen, the device profile CiA DS401 for digital and analog I/O modules is supported. With options for connecting up to 64 u-remote participants, it serves as the head module for the u-remote system bus.

The coupler can be activated with a system-independent web server application via the USB service interface. All information, such as diagnoses, status values and parameters, can therefore be read out. All connected inputs can also be simulated or outputs set. The initial system power supply is already integrated in the field bus coupler. Power is supplied via two 4-pin connectors, separated into the input and output current paths.

Since the CANopen products from Weidmüller make full use of all the latest technological possibilities, such as diagnosis options, they actively support your application in the most important tasks – from engineering and commissioning to fault diagnosis.

More Performance. Simplified.

Block diagram CANopen fieldbus coupler

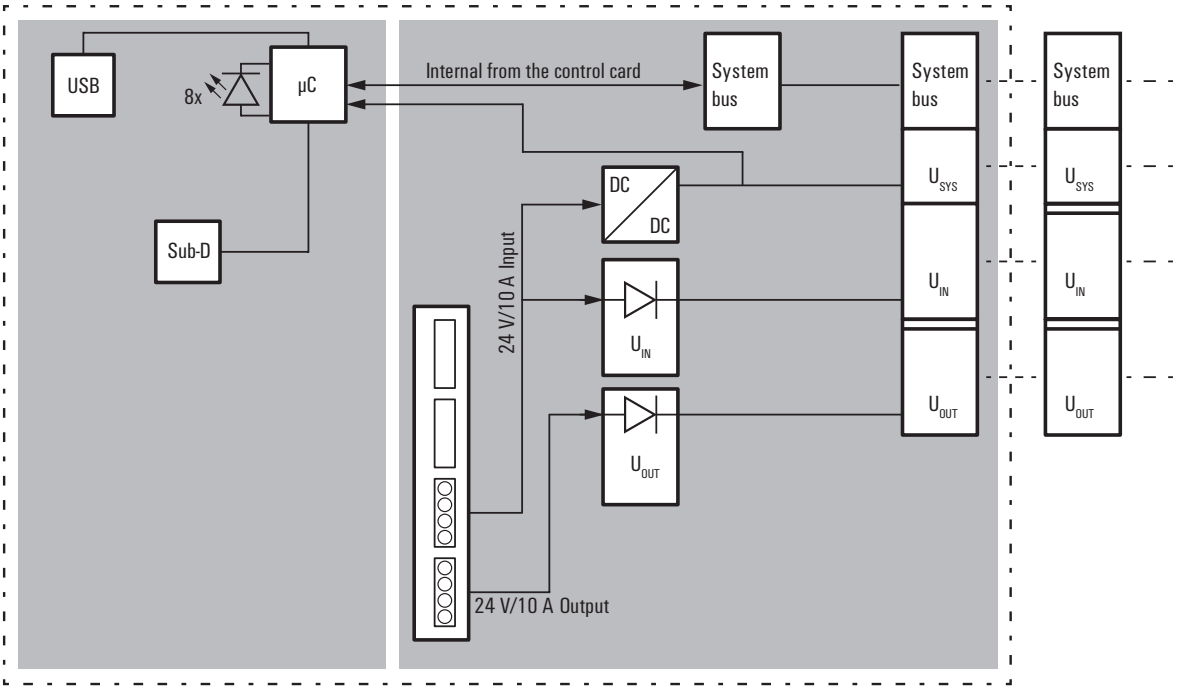

CANopen

- 2 x 10 A current path
- Web server
- System supply for 64 I/O modules
- Temperature range: -20... +60 °C

UR20-FBC-CAN

Technical data

System data	
Connection type	9-pole SUB-D connector (male)
Field bus protocol	CANopen
Process data	488 Byte
Parameter data	244 Byte
Diagnostic data	244 Byte
max. number of modules	64
Configuration interface	Micro USB 2.0
Transmission rate of field bus, max.	1 Mbit/s
Transmission speed of system bus, max.	48 Mbit/s
Supply	
Supply voltage for inputs	24 V DC +20 %/ -15 %
Supply voltage for outputs	24 V DC +20 %/ -15 %
Feed current for I_{IN} (input current path) , max.	10 A
Feed current for I_{OUT} (output current path) , max.	10 A
Current consumption I_{IN} (power segment of the field bus coupler), typ.	90 mA
General data	
Weight	219 g
Dimensions H x W x D	120 mm / 52 mm / 76 mm
Note	Download of EDS-file on www.weidmueller.com

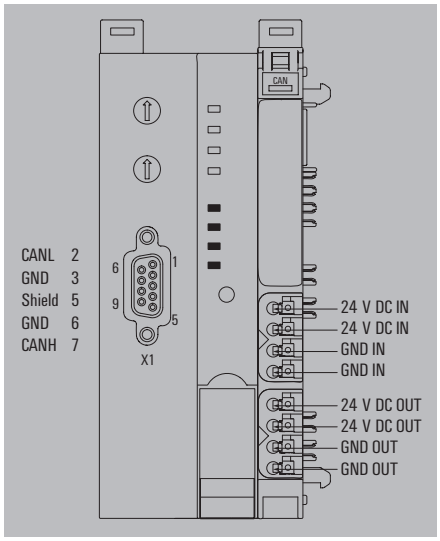

Ordering data

Module variants	Type	Qty.	Order No.
Field bus coupler, CANopen	UR20-FBC-CAN	1	1334890000
Note	A termination kit (UR20-EBK-ACC) is included in the coupler package		

Accessories

	Type	Qty.	Order No.
Coding elements	KOSM BHZ5.00	100	1483050000
Termination kit	UR20-EBK-ACC	5	1346610000
Swievel marker	UR20-SM-ACC	20	1339920000
Connection marker for pusher custom printing	PM 2.7/2.6 MC SDR	192	1323700000
Connection marker for pusher neutral	PM 2.7/2.6 MC NE WS	960	1323710000
Module marker for custom printing	DEK 5/8-11.5 MC SDR	100	1341610000
Module marker for neutral	DEK 5/8-11.5 MC NE WS	500	1341630000
Thermotransfer version (Material: Polyester)	THM UR20 GE	1	1429910000
Thermotransfer version (material: polyester)	THM UR20 WS	1	1429420000
Paper version for Laserprinter	ESO UR20 DIN A4 WS	10	1429430000
USB cable (USB A to Micro USB)	IE-USB-A-MICRO-1.8M	1	1487980000
Replacement parts			
Plug-in connector unit	UR20-PK-1334890000-SP	5	2003530000
Note	1 roll = 1000 label = 1 Qty. 1 sheet = 60 label = 1 Qty.		

Product standard	IEC 61131-2
EMC	EN 61000
ATEX	EN 60079
UL	UL 61010-2-201
MSIP	MSIP-REM-WMG-1334890000

ABS (American Bureau of Shipping)
BSH (Federal Maritime and Hydrographic Agency of Germany)
BV (Bureau Veritas)
DNV GL (Det Norske Veritas) (Germanischer Lloyd)
LR (Lloyd's Register)
RINA (Registro Italiano Navale)

POWERLINK Fieldbus Coupler
Webserver Tool;
Two RJ45 ports; 100 Mbps

ETHERNET POWERLINK

The POWERLINK fieldbus coupler supports the Industrial Ethernet standard. An integrated web server enables system diagnostics even before the controller is connected. The UR20-FBC-PL fieldbus coupler is a Ethernet POWERLINK Standardization Group (EPSG)-certified Ethernet POWERLINK device. It is the head module for the u-remote system bus, to which up to 64 active u-remote modules can be connected. The POWERLINK coupler has two Ethernet connections, the integrated hub has a supports a line network structure.

The coupler can be activated with a system-independent web server application via the USB service interface or the Ethernet ports. All information, such as diagnoses, status values and parameters, can therefore be read out. All connected inputs can also be simulated or outputs set. The initial system power supply is already integrated in the field bus coupler. Power is supplied via two 4-pin connectors, separated into the input and output current paths.

Since the POWERLINK products from Weidmüller make full use of all the latest technological possibilities, such as XDD files and diagnosis messages, they actively support your application in the most important tasks – from engineering and commissioning to faults.

More Performance. Simplified.

Block diagram POWERLINK Fieldbus Coupler

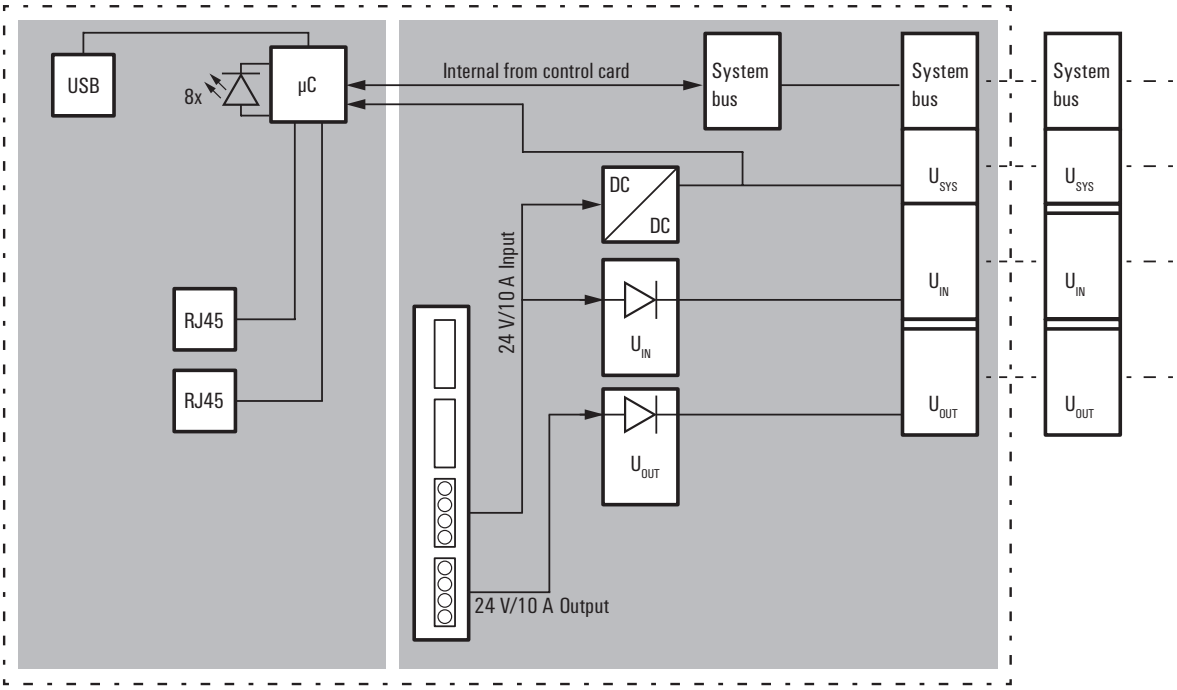

POWERLINK

- 2 x 10 A current path
- Address can be set using rotary switch
- Web server
- System supply for 64 I/O modules
- Temperature range: -20... +60 °C

UR20-FBC-PL

Technical data

System data	
Connection type	2 x RJ45 plug-in connectors
Field bus protocol	POWERLINK
Process data	2980 Byte
Parameter data	4 kByte
Diagnostic data	3008 Byte
max. number of modules	64
Configuration interface	Micro USB 2.0
Transmission rate of field bus, max.	100 Mbit/s
Transmission speed of system bus, max.	48 Mbit/s
Supply	
Supply voltage for inputs	24 V DC +20 %/ -15 %
Supply voltage for outputs	24 V DC +20 %/ -15 %
Feed current for I_{IN} (input current path) , max.	10 A
Feed current for I_{OUT} (output current path) , max.	10 A
Current consumption I_{IN} (power segment of the field bus coupler), typ.	100 mA
General data	
Weight	224 g
Dimensions H x W x D	120 mm / 52 mm / 76 mm
Note	Download of XDD-files on www.weidmueller.com

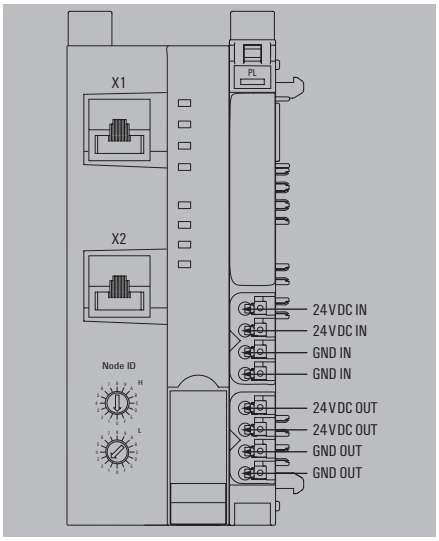

Ordering data

Module variants	Type	Qty.	Order No.
Field bus coupler, POWERLINK	UR20-FBC-PL	1	1334940000
Note	A termination kit (UR20-EBK-ACC) is included in the coupler package		

Accessories

	Type	Qty.	Order No.
Coding elements	KOSM BHZ5.00	100	1483050000
Termination kit	UR20-EBK-ACC	5	1346610000
Swievel marker	UR20-SM-ACC	20	1339920000
Connection marker for pusher custom printing	PM 2.7/2.6 MC SDR	192	1323700000
Connection marker for pusher neutral	PM 2.7/2.6 MC NE WS	960	1323710000
Module marker for custom printing	DEK 5/8-11.5 MC SDR	100	1341610000
Module marker for neutral	DEK 5/8-11.5 MC NE WS	500	1341630000
Thermotransfer version (Material: Polyester)	THM UR20 GE	1	1429910000
Thermotransfer version (material: polyester)	THM UR20 WS	1	1429420000
Paper version for Laserprinter	ESO UR20 DIN A4 WS	10	1429430000
USB cable (USB A to Micro USB)	IE-USB-A-MICRO-1.8M	1	1487980000
Replacement parts			
Plug-in connector unit	UR20-PK-1334940000-SP	5	2425170000
Note			

Product standard	IEC 61131-2
EMC	EN 61000
ATEX	EN 60079
UL	UL 61010-2-201
MSIP	MSIP-REM-WMG-1334940000
ABS (American Bureau of Shipping)	
BSH (Federal Maritime and Hydrographic Agency of Germany)	
BV (Bureau Veritas)	
DNV GL (Det Norske Veritas) (Germanischer Lloyd)	
LR (Lloyd's Register)	
RINA (Registro Italiano Navale)	

Digital input modules

P- or N-switching; Reverse polarity protection, up to 3-wire +FE

Digital input modules from Weidmüller are available in different versions and are used primarily to receive binary control signals from sensors, transmitters, switches or proximity switches. Thanks to their flexible design, they will satisfy your need for well co-ordinated project planning with reserve potential.

All modules are available with 4, 8 or 16 inputs and comply fully with IEC 61131-2. The digital input modules are available as P- or N-switching variant. The digital inputs are for Type 1 and Type 3 sensors in accordance with the standard. With a maximum input frequency of up to 1 kHz, they are used in many different applications. The variant for PLC interface units enables rapid cabling to the proven Weidmüller interface sub-assemblies using system cables. This ensures rapid incorporation into your overall system. Two modules with a timestamp function are able to capture binary signals and to provide a timestamp in 1 µs resolution. Further solutions are possible with the module UR20-4DI-2W-230V-AC which works with accurant current up to 230 V as an input signal.

The module electronics supply the connected sensors from the input current path (U_{IN}).

UR20-4DI-P

UR20-4DI-P-3W

UR20-8DI-P-2W

UR20-8DI-P-3W

UR20-8DI-P-3W-HD

UR20-16DI-P

UR20-16DI-P-PLC-INT

UR20-2DI-P-TS

UR20-4DI-P-TS

UR20-4DI-N

UR20-8DI-N-3W

UR20-16DI-N

UR20-16DI-N-PLC-INT

UR20-4DI-2W-230V-AC

UR20-8DI-ISO-2W

4DI-P

- 4 digital inputs for sensors such as transmitters, switches and proximity sensors
- Positive switching
- Reverse polarity protection
- 2-wire, 3-wire, 3-wire+FE connection
- Input filter can be set channel by channel
- Integrated sensor supply
- Types 1 and 3 acc. to IEC 61131-2

UR20-4DI-P

Technical data

System data	
Interface	u-remote system bus
Transmission speed of system bus, max.	48 Mbit
Galvanic isolation	500 V DC between the current paths
Supply	
Voltage supply	24 V DC +20 %/ -15 %, via the system bus
Current consumption I_{IN} (power segment of the field bus coupler), typ.	8 mA
Current consumption I_{IN} (the respective power segment)	< 10 mA
Digital inputs	
Number of digital inputs	4
Type	Types 1 and 3, EN 61131-2
Input filter	configurable
Input voltage, low	< 5 V
Input voltage, high	> 11 V
Sensor supply	Yes
Sensor connection	2-wire, 3-wire, 3-wire + FE
Reverse polarity protection	Yes
Module diagnosis	Yes
Individual channel diagnosis	No
General data	
Weight	87 g
Dimensions H x W x D	120 mm / 11.5 mm / 76 mm
Note	

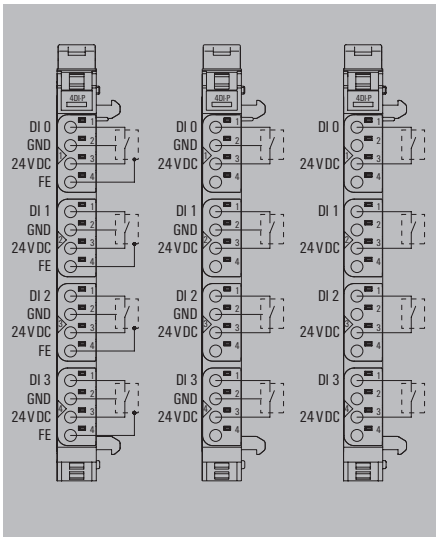

Product standard	IEC 61131-2
EMC	EN 61000
ATEX	EN 60079
UL	UL 61010-2-201
MSIP	MSIP-REM-WMG-1315170000

ABS (American Bureau of Shipping)
BSH (Federal Maritime and Hydrographic Agency of Germany)
BV (Bureau Veritas)
DNV GL (Det Norske Veritas) (Germanischer Lloyd)
LR (Lloyd's Register)
RINA (Registro Italiano Navale)

Ordering data

Module variants	Type	Qty.	Order No.
Digital input module, 4 channels	UR20-4DI-P	1	1315170000
Note			

Accessories

	Type	Qty.	Order No.
Termination kit	UR20-EBK-ACC	5	1346610000
Swivel marker	UR20-SM-ACC	20	1339920000
Connection marker for pusher neutral	PM 2.7/2.6 MC NE WS	960	1323710000
Connection marker for pusher custom printing	PM 2.7/2.6 MC SDR	192	1323700000
Module marker for custom printing	DEK 5/8-11.5 MC SDR	100	1341610000
Module marker for neutral	DEK 5/8-11.5 MC NE WS	500	1341630000
Replacement parts			
Electronic module	UR20-EM-1315170000-SP	1	1346640000
Basic module	UR20-BM-SP	5	1350930000
Plug-in connector unit	UR20-PK-1315170000-SP	5	1346440000
Note	1 roll = 1000 label = 1 Qty. 1 sheet = 60 label = 1 Qty.		

4DI-P-3W

- 4 digital inputs for sensors such as transmitters, switches and proximity sensors
- Positive switching
- Reverse polarity protection
- 2-wire and 3-wire connection
- Input filter can be set channel by channel
- Integrated sensor supply
- Types 1 and 3 acc. to IEC 61131-2

UR20-4DI-P-3W

Technical data

System data	
Interface	u-remote system bus
Transmission speed of system bus, max.	48 Mbit
Galvanic isolation	500 V DC between the current paths
Supply	
Voltage supply	24 V DC +20 %/ -15 %, via the system bus
Current consumption I_{IN} (power segment of the field bus coupler), typ.	8 mA
Current consumption I_{IN} (the respective power segment)	< 10 mA
Digital inputs	
Number of digital inputs	4
Type	Types 1 and 3, EN 61131-2
Input filter	configurable
Input voltage, low	< 5 V
Input voltage, high	> 11 V
Sensor supply	Yes
Sensor connection	2-wire, 3-wire
Reverse polarity protection	Yes
Module diagnosis	Yes
Individual channel diagnosis	No
General data	
Weight	84 g
Dimensions H x W x D	120 mm / 11.5 mm / 76 mm
Note	

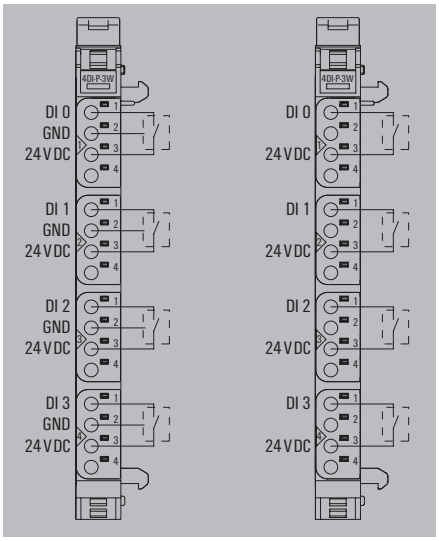

Product standard	IEC 61131-2
EMC	EN 61000
ATEX	EN 60079
UL	UL 61010-2-201
MSIP	

Ordering data

Module variants	Type	Qty.	Order No.
Digital input module, 4 channels, 3-wire	UR20-4DI-P-3W	1	2009360000
Note			

Accessories

	Type	Qty.	Order No.
Coding elements	KOSM BHZ5.00	100	1483050000
Termination kit	UR20-EBK-ACC	5	1346610000
Swievel marker	UR20-SM-ACC	20	1339920000
Connection marker for pusher custom printing	PM 2.7/2.6 MC SDR	192	1323700000
Connection marker for pusher neutral	PM 2.7/2.6 MC NE WS	960	1323710000
Module marker for custom printing	DEK 5/8-11.5 MC SDR	100	1341610000
Module marker for neutral	DEK 5/8-11.5 MC NE WS	500	1341630000
Thermotransfer version (Material: Polyester)	THM UR20 GE	1	1429910000
Thermotransfer version (material: polyester)	THM UR20 WS	1	1429420000
Paper version for Laserprinter	ESO UR20 DIN A4 WS	10	1429430000
Replacement parts			
Electronic module	UR20-EM-2009360000-SP	1	2011260000
Basic module	UR20-BM-SP	5	1350930000
Plug-in connector unit	UR20-PK-2009360000-SP	5	2011240000
Note	1 roll = 1000 label = 1 Qty. 1 sheet = 60 label = 1 Qty.		

8DI-P-2W

- 8 digital inputs for sensors such as transmitters, switches and proximity sensors
- Positive switching
- Reverse polarity protection
- 2-wire connection
- Input filter can be set channel by channel
- Types 1 and 3 acc. to IEC 61131-2

UR20-8DI-P-2W

Technical data

System data	
Interface	u-remote system bus
Transmission speed of system bus, max.	48 Mbit
Galvanic isolation	500 V DC between the current paths
Supply	
Voltage supply	24 V DC +20 %/ -15 %, via the system bus
Current consumption I_{IN} (power segment of the field bus coupler), typ.	8 mA
Current consumption I_{IN} (the respective power segment)	30 mA
Digital inputs	
Number of digital inputs	8
Type	Types 1 and 3, EN 61131-2
Input filter	configurable
Input voltage, low	< 5 V
Input voltage, high	> 11 V
Sensor supply	Yes
Sensor connection	2-wire
Reverse polarity protection	Yes
Module diagnosis	Yes
Individual channel diagnosis	No
General data	
Weight	85 g
Dimensions H x W x D	120 mm / 11.5 mm / 76 mm
Note	

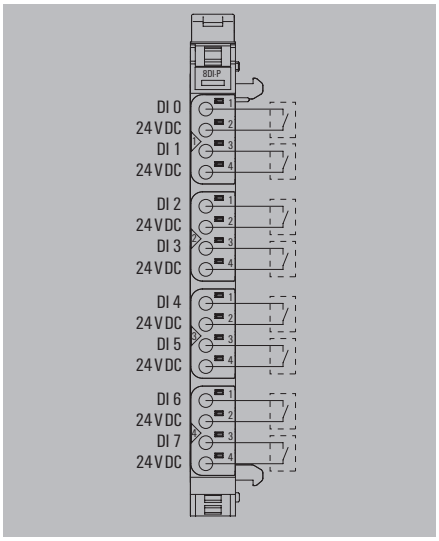

Product standard	IEC 61131-2
EMC	EN 61000
ATEX	EN 60079
UL	UL 61010-2-201
MSIP	MSIP-REM-WMG-1315180000
ABS (American Bureau of Shipping)	
BSH (Federal Maritime and Hydrographic Agency of Germany)	
BV (Bureau Veritas)	
DNV GL (Det Norske Veritas) (Germanischer Lloyd)	
LR (Lloyd's Register)	
RINA (Registro Italiano Navale)	

Ordering data

Module variants	Type	Qty.	Order No.
Digital input module, 8 channels, 2-wire	UR20-8DI-P-2W	1	**1315180000**
Note			

Accessories

	Type	Qty.	Order No.
Coding elements	KOSM BHZ5.00	100	**1483050000**
Termination kit	UR20-EBK-ACC	5	**1346610000**
Swivel marker	UR20-SM-ACC	20	**1339920000**
Connection marker for pusher custom printing	PM 2.7/2.6 MC SDR	192	**1323700000**
Connection marker for pusher neutral	PM 2.7/2.6 MC NE WS	960	**1323710000**
Module marker for custom printing	DEK 5/8-11.5 MC SDR	100	**1341610000**
Module marker for neutral	DEK 5/8-11.5 MC NE WS	500	**1341630000**
Thermotransfer version (Material: Polyester)	THM UR20 GE	1	**1429910000**
Thermotransfer version (material: polyester)	THM UR20 WS	1	**1429420000**
Paper version for Laserprinter	ESO UR20 DIN A4 WS	10	**1429430000**
Replacement parts			
Electronic module	UR20-EM-1315180000-SP	1	**1490220000**
Basic module	UR20-BM-SP	5	**1350930000**
Plug-in connector unit	UR20-PK-1315180000-SP	5	**1346430000**
Note	1 roll = 1000 label = 1 Qty. 1 sheet = 60 label = 1 Qty.		

8DI-P-3W

- 8 digital inputs for sensors such as transmitters, switches and proximity sensors
- Positive switching
- Reverse polarity protection
- 2-wire and 3-wire connection
- Input filter can be set channel by channel
- Integrated sensor supply
- Types 1 and 3 acc. to IEC 61131-2

UR20-8DI-P-3W

Technical data

System data	
Interface	u-remote system bus
Transmission speed of system bus, max.	48 Mbit
Galvanic isolation	500 V DC between the current paths
Supply	
Voltage supply	24 V DC +20 %/ -15 %, via the system bus
Current consumption I_{IN} (power segment of the field bus coupler), typ.	8 mA
Current consumption I_{IN} (the respective power segment)	< 22 mA + sensor feed
Digital inputs	
Number of digital inputs	8
Type	Types 1 and 3, EN 61131-2
Input filter	configurable
Input voltage, low	< 5 V
Input voltage, high	> 11 V
Sensor supply	Yes
Sensor connection	2-wire, 3-wire
Reverse polarity protection	Yes
Module diagnosis	Yes
Individual channel diagnosis	No
General data	
Weight	83 g
Dimensions H x W x D	120 mm / 11.5 mm / 76 mm
Note	

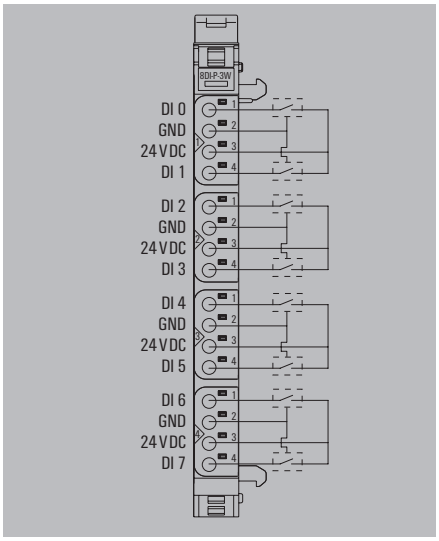

Product standard	IEC 61131-2
EMC	EN 61000
ATEX	EN 60079
UL	UL 61010-2-201
MSIP	MSIP-REM-WMG-1394400000
ABS (American Bureau of Shipping)	
BSH (Federal Maritime and Hydrographic Agency of Germany)	
BV (Bureau Veritas)	
DNV GL (Det Norske Veritas) (Germanischer Lloyd)	
LR (Lloyd's Register)	
RINA (Registro Italiano Navale)	

Ordering data

Module variants	Type	Qty.	Order No.
Digital input module, 8 channels, 3-wire	UR20-8DI-P-3W	1	1394400000
Note			

Accessories

	Type	Qty.	Order No.
Coding elements	KOSM BHZ5.00	100	1483050000
Termination kit	UR20-EBK-ACC	5	1346610000
Swivel marker	UR20-SM-ACC	20	1339920000
Connection marker for pusher custom printing	PM 2.7/2.6 MC SDR	192	1323700000
Connection marker for pusher neutral	PM 2.7/2.6 MC NE WS	960	1323710000
Module marker for custom printing	DEK 5/8-11.5 MC SDR	100	1341610000
Module marker for neutral	DEK 5/8-11.5 MC NE WS	500	1341630000
Thermotransfer version (Material: Polyester)	THM UR20 GE	1	1429910000
Thermotransfer version (material: polyester)	THM UR20 WS	1	1429420000
Paper version for Laserprinter	ESO UR20 DIN A4 WS	10	1429430000
Replacement parts			
Electronic module	UR20-EM-1394400000-SP	1	1346650000
Basic module	UR20-BM-SP	5	1350930000
Plug-in connector unit	UR20-PK-1394400000-SP	5	1411430000
Note	1 roll = 1000 label = 1 Qty. 1 sheet = 60 label = 1 Qty.		

8DI-P-3W-HD

- 8 digital inputs for sensors such as transmitters, switches and proximity sensors
- Positive switching
- Reverse polarity protection
- 2-wire and 3-wire connection
- Input filter can be set channel by channel
- Integrated sensor supply
- Types 1 and 3 acc. to IEC 61131-2

UR20-8DI-P-3W-HD

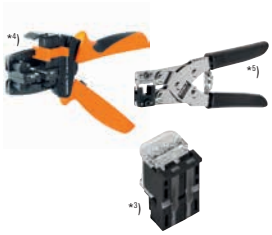

Note: Please order connector separately

Technical data

System data	
Interface	u-remote system bus
Transmission speed of system bus, max.	48 Mbit
Galvanic isolation	DC 500 V between current paths
Supply	
Voltage supply	24 V DC +20 %/ -15 %, via the system bus
Current consumption I_{IN} (power segment of the field bus coupler), typ.	8 mA
Current consumption I_{IN} (the respective power segment)	< 22 mA + sensor feed
Digital inputs	
Number of digital inputs	8
Type	Types 1 and 3, EN 61131-2
Input filter	configurable
Input voltage, low	< 5 V
Input voltage, high	> 11 V
Sensor supply	Yes
Sensor connection	2-wire, 3-wire
Reverse polarity protection	Yes
Module diagnosis	Yes
Individual channel diagnosis	No
General data	
Weight	66 g
Dimensions H x W x D	120 mm / 11.5 mm / 76 mm
Note	

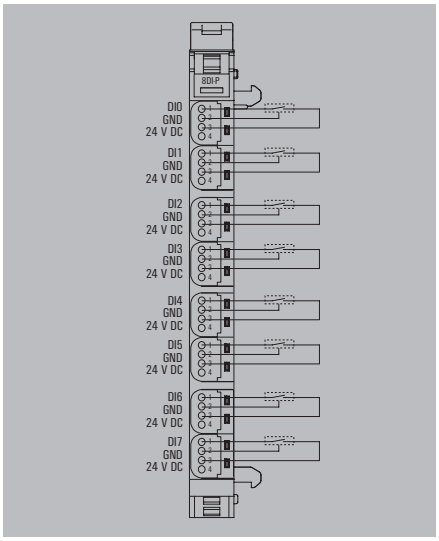

Product standard	IEC 61131-2
EMC	EN 61000
ATEX	EN 60079
UL	UL 61010-2-201
MSIP	MSIP-REM-WMG-1315190000

ABS (American Bureau of Shipping)
BSH (Federal Maritime and Hydrographic Agency of Germany)
BV (Bureau Veritas)
DNV GL (Det Norske Veritas) (Germanischer Lloyd)
LR (Lloyd's Register)
RINA (Registro Italiano Navale)

Ordering data

Module variants	Type	Qty.	Order No.
Digital input module, 8 channels, 3-wire, HD plug	UR20-8DI-P-3W-HD	1	1315190000
Note			

Accessories

	Type	Qty.	Order No.
Coding elements	KOSM BHZ5.00	100	1483050000
Termination kit	UR20-EBK-ACC	5	1346610000
Swivel marker	UR20-SM-ACC	20	1339920000
*3) HD plug	UR20-PG0.35	8	1469340000
*4) Stripping tool	MULTI-STRIPAX 6-16	1	9202210000
*5) Pressing tool	PWZ-UR20-HD	1	1525820000
Module marker for custom printing	DEK 5/8-11.5 MC SDR	100	1341610000
Module marker for neutral	DEK 5/8-11.5 MC NE WS	500	1341630000
Thermotransfer version (Material: Polyester)	THM UR20 GE	1	1429910000
Thermotransfer version (material: polyester)	THM UR20 WS	1	1429420000
Paper version for Laserprinter	ESO UR20 DIN A4 WS	10	1429430000
Replacement parts			
Electronic module	UR20-EM-1315190000-SP	1	1346670000
Basic module	UR20-BM-SP	5	1350930000
Plug-in connector unit	UR20-PK-1315190000-SP	5	1518800000
Note	Note: please order plug (1469340000) separately.		

16DI-P

- 16 digital inputs
- Positive switching
- Reverse polarity protection
- 1-wire connection
- Permanently set input filter, 3 ms
- Types 1 and 3 acc. to IEC 61131-2

UR20-16DI-P

Technical data

System data	
Interface	u-remote system bus
Transmission speed of system bus, max.	48 Mbit
Galvanic isolation	500 V DC between the current paths
Supply	
Voltage supply	24 V DC +20 %/ -15 %, via the system bus
Current consumption I_{IN} (power segment of the field bus coupler), typ.	8 mA
Current consumption I_{IN} (the respective power segment)	< 15 mA
Digital inputs	
Number of digital inputs	16
Type	Types 1 and 3, EN 61131-2
Input filter	3 ms
Input voltage, low	< 5 V
Input voltage, high	> 11 V
Sensor supply	No
Sensor connection	Single-conductor
Reverse polarity protection	Yes
Module diagnosis	Yes
Individual channel diagnosis	No
General data	
Weight	87 g
Dimensions H x W x D	120 mm / 11.5 mm / 76 mm
Note	

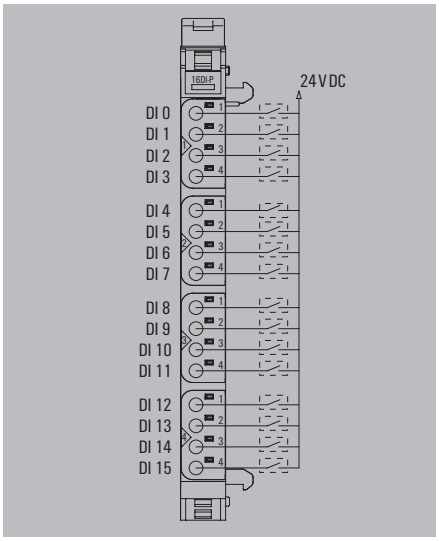

Product standard	IEC 61131-2
EMC	EN 61000
ATEX	EN 60079
UL	UL 61010-2-201
MSIP	MSIP-REM-WMG-1315200000

ABS (American Bureau of Shipping)
BSH (Federal Maritime and Hydrographic Agency of Germany)
BV (Bureau Veritas)
DNV GL (Det Norske Veritas) (Germanischer Lloyd)
LR (Lloyd's Register)
RINA (Registro Italiano Navale)

Ordering data

Module variants	Type	Qty.	Order No.
Digital input module, 16 channels	UR20-16DI-P	1	1315200000
Note			

Accessories

	Type	Qty.	Order No.
Coding elements	KOSM BHZ5.00	100	1483050000
Termination kit	UR20-EBK-ACC	5	1346610000
Swivel marker	UR20-SM-ACC	20	1339920000
Connection marker for pusher custom printing	PM 2.7/2.6 MC SDR	192	1323700000
Connection marker for pusher neutral	PM 2.7/2.6 MC NE WS	960	1323710000
Module marker for custom printing	DEK 5/8-11.5 MC SDR	100	1341610000
Module marker for neutral	DEK 5/8-11.5 MC NE WS	500	1341630000
Thermotransfer version (Material: Polyester)	THM UR20 GE	1	1429910000
Thermotransfer version (material: polyester)	THM UR20 WS	1	1429420000
Paper version for Laserprinter	ESO UR20 DIN A4 WS	10	1429430000
Replacement parts			
Electronic module	UR20-EM-1315200000-SP	1	1346680000
Basic module	UR20-BM-SP	5	1350930000
Plug-in connector unit	UR20-PK-1315200000-SP	5	1346400000
Note	1 roll = 1000 label = 1 Qty. 1 sheet = 60 label = 1 Qty.		

16DI-P-PLC-INT

- 16 digital inputs
- Positive switching
- Reverse polarity protection
- for connecting a PLC interface element
- Permanently set input filter, 3 ms
- Types 1 and 3 acc. to IEC 61131-2

UR20-16DI-P-PLC-INT

Technical data

System data	
Interface	u-remote system bus
Transmission speed of system bus, max.	48 Mbit
Galvanic isolation	500 V DC between the current paths
Supply	
Voltage supply	24 V DC +20 %/ -15 %, via the system bus
Current consumption I_{IN} (power segment of the field bus coupler), typ.	8 mA
Current consumption I_{IN} (the respective power segment)	< 15 mA
Digital inputs	
Number of digital inputs	16
Type	Types 1 and 3, EN 61131-2
Input filter	3 ms
Input voltage, low	< 5 V
Input voltage, high	> 11 V
Sensor supply	external
Sensor connection	PLC-Interface
Reverse polarity protection	Yes
Module diagnosis	Yes
Individual channel diagnosis	No
General data	
Weight	85 g
Dimensions H x W x D	120 mm / 11.5 mm / 76 mm
Note	

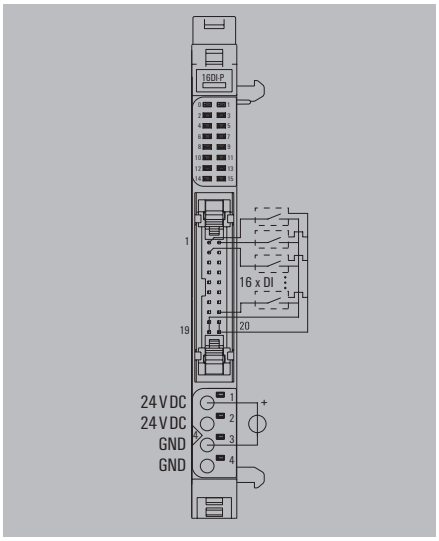

Product standard	IEC 61131-2
EMC	EN 61000
ATEX	EN 60079
UL	UL 61010-2-201
MSIP	MSIP-REM-WMG-1315210000
ABS (American Bureau of Shipping)	
BSH (Federal Maritime and Hydrographic Agency of Germany)	
BV (Bureau Veritas)	
DNV GL (Det Norske Veritas) (Germanischer Lloyd)	
LR (Lloyd's Register)	
RINA (Registro Italiano Navale)	

Ordering data

Module variants	Type	Qty.	Order No.
Digital input module, 16 channels, PLC interface	UR20-16DI-P-PLC-INT	1	**1315210000**
Note			

Accessories

	Type	Qty.	Order No.
Coding elements	KOSM BHZ5.00	100	**1483050000**
Termination kit	UR20-EBK-ACC	5	**1346610000**
Swivel marker	UR20-SM-ACC	20	**1339920000**
Connection marker for pusher custom printing	PM 2.7/2.6 MC SDR	192	**1323700000**
Connection marker for pusher neutral	PM 2.7/2.6 MC NE WS	960	**1323710000**
Module marker for custom printing	DEK 5/8-11.5 MC SDR	100	**1341610000**
Module marker for neutral	DEK 5/8-11.5 MC NE WS	500	**1341630000**
Thermotransfer version (Material: Polyester)	THM UR20 GE	1	**1429910000**
Thermotransfer version (material: polyester)	THM UR20 WS	1	**1429420000**
Paper version for Laserprinter	ESO UR20 DIN A4 WS	10	**1429430000**
PLC interface element	RS 16IO 1W H S	1	**9445700000**
Pre-assembled cable, 1m	PAC-UNIV-HE20-LCH-1M	1	**7789306010**
Replacement parts			
Electronic module	UR20-EM-1315210000-SP	1	**1346690000**
Basic module	UR20-BM-SP	5	**1350930000**
Plug-in connector unit	UR20-PK-1315210000-SP	5	**1346590000**
Note	1 roll = 1000 label = 1 Qty. 1 sheet = 60 label = 1 Qty.		

2DI-P-TS

- 2 digital inputs for sensors such as transmitters, switches and proximity sensors
- Positive switching
- 2-wire, 3-wire, 3-wire+FE connection
- Input filter can be set channel by channel
- Types 1 and 3 acc. to IEC 61131-2
- 1 µs Timestamp resolution

UR20-2DI-P-TS

Technical data

System data	
Interface	u-remote system bus
Transmission speed of system bus, max.	48 Mbit
Galvanic isolation	500 V DC between the current paths
Supply	
Voltage supply	24 V DC +20 %/ -15 %, via the system bus
Current consumption I_{IN} (power segment of the field bus coupler), typ.	8 mA
Current consumption I_{IN} (the respective power segment)	< 10 mA + sensor feed
Digital inputs	
Number of digital inputs	2
Type	Types 1 and 3, EN 61131-2
Input filter	configurable
Input voltage, low	< 5 V
Input voltage, high	> 11 V
Sensor supply	Yes
Sensor connection	2-wire, 3-wire, 3-wire + FE
Reverse polarity protection	Yes
Module diagnosis	Yes
Individual channel diagnosis	No
Time stamp data width	16 Bit
Time stamp resolution	1 µs
General data	
Weight	83 g
Dimensions H x W x D	120 mm / 11.5 mm / 76 mm
Note	

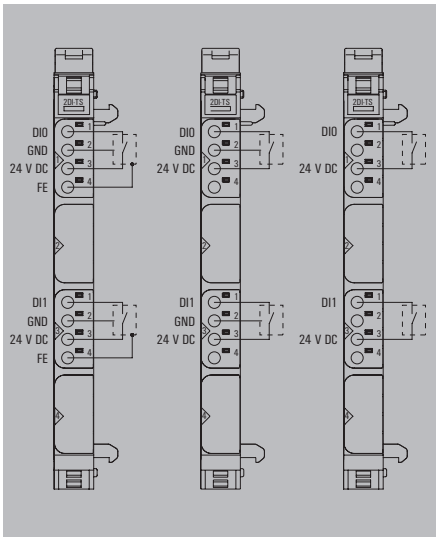

Product standard	IEC 61131-2
EMC	EN 61000
ATEX	EN 60079
UL	UL 61010-2-201
MSIP	MSIP-REM-WMG-1460140000

ABS (American Bureau of Shipping)
BSH (Federal Maritime and Hydrographic Agency of Germany)
BV (Bureau Veritas)
DNV GL (Det Norske Veritas) (Germanischer Lloyd)
LR (Lloyd's Register)
RINA (Registro Italiano Navale)

Ordering data

Module variants	Type	Qty.	Order No.
Digital input module, 2 channels, Timestamp	UR20-2DI-P-TS	1	**1460140000**
Note			

Accessories

	Type	Qty.	Order No.
Coding elements	KOSM BHZ5.00	100	**1483050000**
Termination kit	UR20-EBK-ACC	5	**1346610000**
Swivel marker	UR20-SM-ACC	20	**1339920000**
Connection marker for pusher custom printing	PM 2.7/2.6 MC SDR	192	**1323700000**
Connection marker for pusher neutral	PM 2.7/2.6 MC NE WS	960	**1323710000**
Module marker for custom printing	DEK 5/8-11.5 MC SDR	100	**1341610000**
Module marker for neutral	DEK 5/8-11.5 MC NE WS	500	**1341630000**
Thermotransfer version (Material: Polyester)	THM UR20 GE	1	**1429910000**
Thermotransfer version (material: polyester)	THM UR20 WS	1	**1429420000**
Paper version for Laserprinter	ESO UR20 DIN A4 WS	10	**1429430000**
Replacement parts			
Electronic module	UR20-EM-1460140000-SP	1	**1463690000**
Basic module	UR20-BM-SP	5	**1350930000**
Plug-in connector unit	UR20-PK-1460140000-SP	5	**1484110000**
Note	1 roll = 1000 label = 1 Qty. 1 sheet = 60 label = 1 Qty.		

4DI-P-TS

- 4 digital inputs for sensors such as transmitters, switches and proximity sensors
- Positive switching
- 2-wire, 3-wire, 3-wire+FE connection
- Input filter can be set channel by channel
- Types 1 and 3 acc. to IEC 61131-2
- 1 µs Timestamp resolution

UR20-4DI-P-TS

Technical data

System data	
Interface	u-remote system bus
Transmission speed of system bus, max.	48 Mbit
Galvanic isolation	500 V DC between the current paths
Supply	
Voltage supply	24 V DC +20 %/ -15 %, via the system bus
Current consumption I_{IN} (power segment of the field bus coupler), typ.	8 mA
Current consumption I_{IN} (the respective power segment)	< 12 mA + sensor feed
Digital inputs	
Number of digital inputs	4
Type	Types 1 and 3, EN 61131-2
Input filter	configurable
Input voltage, low	< 5 V
Input voltage, high	> 11 V
Sensor supply	Yes
Sensor connection	2-wire, 3-wire, 3-wire + FE
Reverse polarity protection	Yes
Module diagnosis	Yes
Individual channel diagnosis	No
Time stamp data width	16 Bit
Time stamp resolution	1 µs
General data	
Weight	87 g
Dimensions H x W x D	120 mm / 11.5 mm / 76 mm
Note	

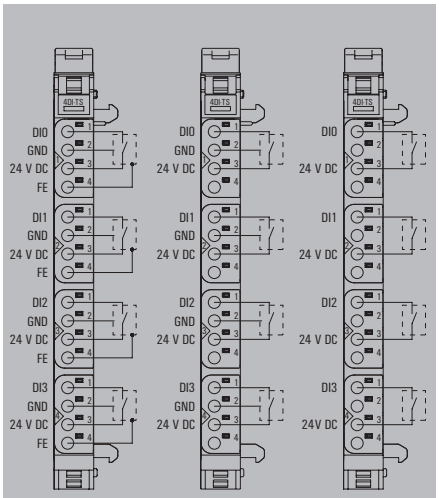

Product standard	IEC 61131-2
EMC	EN 61000
ATEX	EN 60079
UL	UL 61010-2-201
MSIP	MSIP-REM-WMG-1460150000

ABS (American Bureau of Shipping)
BSH (Federal Maritime and Hydrographic Agency of Germany)
BV (Bureau Veritas)
DNV GL (Det Norske Veritas) (Germanischer Lloyd)
LR (Lloyd's Register)
RINA (Registro Italiano Navale)

Ordering data

Module variants	Type	Qty.	Order No.
Digital input module, 4 channels, Timestamp	UR20-4DI-P-TS	1	1460150000
Note			

Accessories

	Type	Qty.	Order No.
Coding elements	KOSM BHZ5.00	100	1483050000
Termination kit	UR20-EBK-ACC	5	1346610000
Swievel marker	UR20-SM-ACC	20	1339920000
Connection marker for pusher custom printing	PM 2.7/2.6 MC SDR	192	1323700000
Connection marker for pusher neutral	PM 2.7/2.6 MC NE WS	960	1323710000
Module marker for custom printing	DEK 5/8-11.5 MC SDR	100	1341610000
Module marker for neutral	DEK 5/8-11.5 MC NE WS	500	1341630000
Thermotransfer version (Material: Polyester)	THM UR20 GE	1	1429910000
Thermotransfer version (material: polyester)	THM UR20 WS	1	1429420000
Paper version for Laserprinter	ESO UR20 DIN A4 WS	10	1429430000
Replacement parts			
Electronic module	UR20-EM-1460150000-SP	1	1463680000
Basic module	UR20-BM-SP	5	1350930000
Plug-in connector unit	UR20-PK-1460150000-SP	5	1484430000
Note	1 roll = 1000 label = 1 Qty. 1 sheet = 60 label = 1 Qty.		

4DI-N

- 4 digital inputs for sensors such as transmitters, switches and proximity sensors
- Negative switching
- Reverse polarity protection
- 2-wire, 3-wire, 3-wire+FE connection
- Input filter can be set channel by channel
- Integrated sonsor supply
- Types 1 and 3 acc. to IEC 61131-2

UR20-4DI-N

Technical data

System data	
Interface	u-remote system bus
Transmission speed of system bus, max.	48 Mbit
Galvanic isolation	500 V DC between the current paths
Supply	
Voltage supply	24 V DC +20 %/ -15 %, via the system bus
Current consumption I_{IN} (power segment of the field bus coupler), typ.	8 mA
Current consumption I_{IN} (the respective power segment)	< 10 mA
Digital inputs	
Number of digital inputs	4
Type	Types 1 and 3, EN 61131-2
Input filter	configurable
Input voltage, low	> - 5 V referred to +24 V of the input power supply U_{IN}
Input voltage, high	< - 11 V referred to +24 V of the input power supply U_{IN}
Sensor supply	Yes
Sensor connection	2-wire, 3-wire, 3-wire + FE
Reverse polarity protection	Yes
Module diagnosis	Yes
Individual channel diagnosis	No
General data	
Weight	87 g
Dimensions H x W x D	120 mm / 11.5 mm / 76 mm
Note	

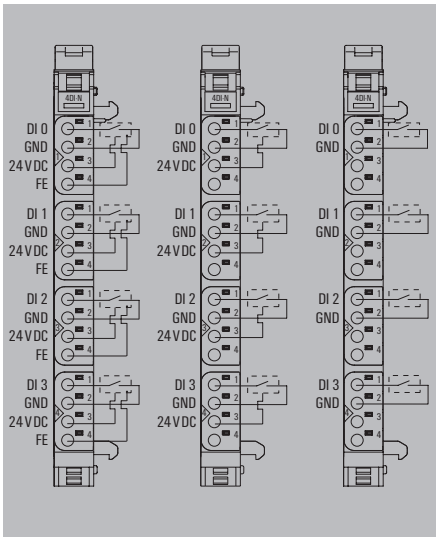

Product standard	IEC 61131-2
EMC	EN 61000
ATEX	EN 60079
UL	UL 61010-2-201
MSIP	MSIP-REM-WMG-1315350000

ABS (American Bureau of Shipping)
BSH (Federal Maritime and Hydrographic Agency of Germany)
BV (Bureau Veritas)
DNV GL (Det Norske Veritas) (Germanischer Lloyd)
LR (Lloyd's Register)
RINA (Registro Italiano Navale)

Ordering data

Module variants	Type	Qty.	Order No.
Digital input module, 4 channels	UR20-4DI-N	1	1315350000
Note			

Accessories

	Type	Qty.	Order No.
Coding elements	KOSM BHZ5.00	100	1483050000
Termination kit	UR20-EBK-ACC	5	1346610000
Swivel marker	UR20-SM-ACC	20	1339920000
Connection marker for pusher custom printing	PM 2.7/2.6 MC SDR	192	1323700000
Connection marker for pusher neutral	PM 2.7/2.6 MC NE WS	960	1323710000
Module marker for custom printing	DEK 5/8-11.5 MC SDR	100	1341610000
Module marker for neutral	DEK 5/8-11.5 MC NE WS	500	1341630000
Thermotransfer version (Material: Polyester)	THM UR20 GE	1	1429910000
Thermotransfer version (material: polyester)	THM UR20 WS	1	1429420000
Paper version for Laserprinter	ESO UR20 DIN A4 WS	10	1429430000
Replacement parts			
Electronic module	UR20-EM-1315350000-SP	1	1346870000
Basic module	UR20-BM-SP	5	1350930000
Plug-in connector unit	UR20-PK-1315350000-SP	5	1559770000
Note	1 roll = 1000 label = 1 Qty. 1 sheet = 60 label = 1 Qty.		

8DI-N-3W

- 8 digital inputs for sensors such as transmitters, switches and proximity sensors
- Negative switching
- Reverse polarity protection
- 2-wire and 3-wire connection
- Input filter can be set channel by channel
- Integrated sonsor supply
- Types 1 and 3 acc. to IEC 61131-2

UR20-8DI-N-3W

Technical data

System data	
Interface	u-remote system bus
Transmission speed of system bus, max.	48 Mbit
Galvanic isolation	500 V DC between the current paths
Supply	
Voltage supply	24 V DC +20 %/ -15 %, via the system bus
Current consumption I_{IN} (power segment of the field bus coupler), typ.	8 mA
Current consumption I_{IN} (the respective power segment)	< 20 mA
Digital inputs	
Number of digital inputs	8
Type	Types 1 and 3, EN 61131-2
Input filter	configurable
Input voltage, low	> - 5 V referred to +24 V of the input power supply U_{IN}
Input voltage, high	< - 11 V referred to +24 V of the input power supply U_{IN}
Sensor supply	Yes
Sensor connection	2-wire, 3-wire
Reverse polarity protection	Yes
Module diagnosis	Yes
Individual channel diagnosis	No
General data	
Weight	83 g
Dimensions H x W x D	120 mm / 11.5 mm / 76 mm
Note	

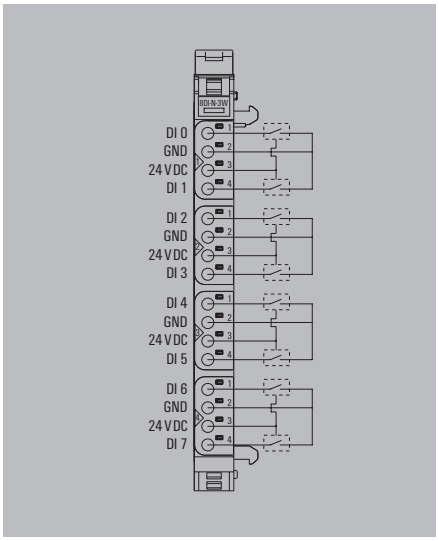

Product standard	IEC 61131-2
EMC	EN 61000
ATEX	EN 60079
UL	UL 61010-2-201
MSIP	MSIP-REM-WMG-1315370000
ABS (American Bureau of Shipping)	
BSH (Federal Maritime and Hydrographic Agency of Germany)	
BV (Bureau Veritas)	
DNV GL (Det Norske Veritas) (Germanischer Lloyd)	
LR (Lloyd's Register)	
RINA (Registro Italiano Navale)	

Ordering data

Module variants	Type	Qty.	Order No.
Digital input module, 8 channels, 3-wire	UR20-8DI-N-3W	1	1315370000
Note			

Accessories

	Type	Qty.	Order No.
Coding elements	KOSM BHZ5.00	100	1483050000
Termination kit	UR20-EBK-ACC	5	1346610000
Swivel marker	UR20-SM-ACC	20	1339920000
Connection marker for pusher custom printing	PM 2.7/2.6 MC SDR	192	1323700000
Connection marker for pusher neutral	PM 2.7/2.6 MC NE WS	960	1323710000
Module marker for custom printing	DEK 5/8-11.5 MC SDR	100	1341610000
Module marker for neutral	DEK 5/8-11.5 MC NE WS	500	1341630000
Thermotransfer version (Material: Polyester)	THM UR20 GE	1	1429910000
Thermotransfer version (material: polyester)	THM UR20 WS	1	1429420000
Paper version for Laserprinter	ESO UR20 DIN A4 WS	10	1429430000
Replacement parts			
Electronic module	UR20-EM-1315370000-SP	1	1346880000
Basic module	UR20-BM-SP	5	1350930000
Plug-in connector unit	UR20-PK-1315370000-SP	5	1559780000
Note	1 roll = 1000 label = 1 Qty. 1 sheet = 60 label = 1 Qty.		

16DI-N

- 16 digital inputs
- Negative switching
- Reverse polarity protection
- 1-wire connection
- Permanently set input filter, 3 ms
- Types 1 and 3 acc. to IEC 61131-2

UR20-16DI-N

Technical data

System data	
Interface	u-remote system bus
Transmission speed of system bus, max.	48 Mbit
Galvanic isolation	500 V DC between the current paths
Supply	
Voltage supply	24 V DC +20 %/ -15 %, via the system bus
Current consumption I_{IN} (power segment of the field bus coupler), typ.	8 mA
Current consumption I_{IN} (the respective power segment)	< 15 mA
Digital inputs	
Number of digital inputs	16
Type	Types 1 and 3, EN 61131-2
Input filter	3 ms
Input voltage, low	> - 5 V referred to +24 V of the input power supply U_{IN}
Input voltage, high	< - 11 V referred to +24 V of the input power supply U_{IN}
Sensor supply	No
Sensor connection	Single-conductor
Reverse polarity protection	Yes
Module diagnosis	Yes
Individual channel diagnosis	No
General data	
Weight	86 g
Dimensions H x W x D	120 mm / 11.5 mm / 76 mm
Note	

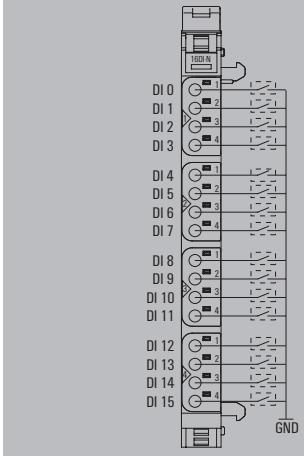

Product standard	IEC 61131-2
EMC	EN 61000
ATEX	EN 60079
UL	UL 61010-2-201
MSIP	MSIP-REM-WMG-1315390000

ABS (American Bureau of Shipping)
BSH (Federal Maritime and Hydrographic Agency of Germany)
BV (Bureau Veritas)
DNV GL (Det Norske Veritas) (Germanischer Lloyd)
LR (Lloyd's Register)
RINA (Registro Italiano Navale)

Ordering data

Module variants	Type	Qty.	Order No.
Digital input module, 16 channels	UR20-16DI-N	1	1315390000
Note			

Accessories

	Type	Qty.	Order No.
Coding elements	KOSM BHZ5.00	100	1483050000
Termination kit	UR20-EBK-ACC	5	1346610000
Swivel marker	UR20-SM-ACC	20	1339920000
Connection marker for pusher custom printing	PM 2.7/2.6 MC SDR	192	1323700000
Connection marker for pusher neutral	PM 2.7/2.6 MC NE WS	960	1323710000
Module marker for custom printing	DEK 5/8-11.5 MC SDR	100	1341610000
Module marker for neutral	DEK 5/8-11.5 MC NE WS	500	1341630000
Thermotransfer version (Material: Polyester)	THM UR20 GE	1	1429910000
Thermotransfer version (material: polyester)	THM UR20 WS	1	1429420000
Paper version for Laserprinter	ESO UR20 DIN A4 WS	10	1429430000
Replacement parts			
Electronic module	UR20-EM-1315390000-SP	1	1346920000
Basic module	UR20-BM-SP	5	1350930000
Plug-in connector unit	UR20-PK-1315390000-SP	5	1559790000
Note	1 roll = 1000 label = 1 Qty. 1 sheet = 60 label = 1 Qty.		

16DI-N-PLC-INT

- 16 digital inputs
- Negative switching
- Reverse polarity protection
- For connecting a PLC interface element
- Permanently set input filter, 3 ms
- Types 1 and 3 acc. to IEC 61131-2

UR20-16DI-N-PLC-INT

Technical data

System data	
Interface	u-remote system bus
Transmission speed of system bus, max.	48 Mbit
Galvanic isolation	500 V DC between the current paths
Supply	
Voltage supply	24 V DC +20 %/ -15 %, via the system bus
Current consumption I_{IN} (power segment of the field bus coupler), typ.	8 mA
Current consumption I_{IN} (the respective power segment)	< 15 mA
Digital inputs	
Number of digital inputs	16
Type	Types 1 and 3, EN 61131-2
Input filter	3 ms
Input voltage, low	> - 5 V referred to +24 V of the input power supply U_{IN}
Input voltage, high	< - 11 V referred to +24 V of the input power supply U_{IN}
Sensor supply	external
Sensor connection	PLC-Interface
Reverse polarity protection	Yes
Module diagnosis	Yes
Individual channel diagnosis	No
General data	
Weight	81 g
Dimensions H x W x D	120 mm / 11.5 mm / 76 mm
Note	

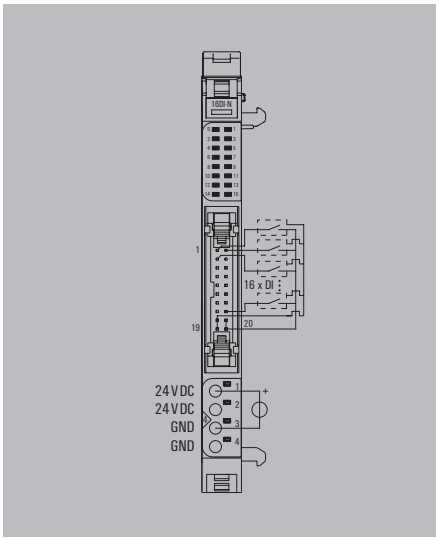

Product standard	IEC 61131-2
EMC	EN 61000
ATEX	EN 60079
UL	UL 61010-2-201
MSIP	MSIP-REM-WMG-1315400000
ABS (American Bureau of Shipping)	
BSH (Federal Maritime and Hydrographic Agency of Germany)	
BV (Bureau Veritas)	
DNV GL (Det Norske Veritas) (Germanischer Lloyd)	
LR (Lloyd's Register)	
RINA (Registro Italiano Navale)	

Ordering data

Module variants	Type	Qty.	Order No.
Digital input module, 16 channels, PLC interface	UR20-16DI-N-PLC-INT	1	**1315400000**
Note			

Accessories

	Type	Qty.	Order No.
Coding elements	KOSM BHZ5.00	100	**1483050000**
Termination kit	UR20-EBK-ACC	5	**1346610000**
Swivel marker	UR20-SM-ACC	20	**1339920000**
Connection marker for pusher custom printing	PM 2.7/2.6 MC SDR	192	**1323700000**
Connection marker for pusher neutral	PM 2.7/2.6 MC NE WS	960	**1323710000**
Module marker for custom printing	DEK 5/8-11.5 MC SDR	100	**1341610000**
Module marker for neutral	DEK 5/8-11.5 MC NE WS	500	**1341630000**
Thermotransfer version (Material: Polyester)	THM UR20 GE	1	**1429910000**
Thermotransfer version (material: polyester)	THM UR20 WS	1	**1429420000**
Paper version for Laserprinter	ESO UR20 DIN A4 WS	10	**1429430000**
PLC interface element	RS 16IO 1W H S	1	**9445700000**
Pre-assembled cable, 1m	PAC-UNIV-HE20-LCH-1M	1	**7789306010**
Replacement parts			
Electronic module	UR20-EM-1315400000-SP	1	**1346930000**
Basic module	UR20-BM-SP	5	**1350930000**
Plug-in connector unit	UR20-PK-1315400000-SP	5	**1559800000**
Note	1 roll = 1000 label = 1 Qty. 1 sheet = 60 label = 1 Qty.		

8DI-ISO-2W

- 8 digital inputs for sensors
- Insulation up to 500 V
- Reverse polarity protection
- 2-wire connection
- Types 1 and 3 acc. to IEC 61131-2

UR20-8DI-ISO-2W

Technical data

System data	
Interface	u-remote system bus
Transmission speed of system bus, max.	48 Mbit
Galvanic isolation	500 V DC between the current paths
Supply	
Voltage supply	no
Current consumption I_{IN} (power segment of the field bus coupler), typ.	8 mA
Current consumption I_{IN} (the respective power segment)	No
Digital inputs	
Number of digital inputs	8
Type	Types 1 and 3, EN 61131-2
Input filter	Input delay adjustable from 0 to 40 ms
Input voltage, low	< 10 V
Input voltage, high	> 11 V
Sensor supply	No
Sensor connection	2-wire
Reverse polarity protection	Yes
Module diagnosis	Yes
Individual channel diagnosis	No
Insulation	500 V (channel to channel), 500 V (channel to suppy voltage)
General data	
Weight	84 g
Dimensions H x W x D	120 mm / 11.5 mm / 76 mm
Note	

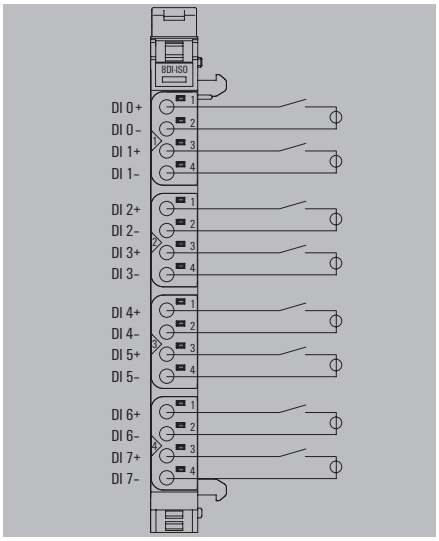

Product standard	IEC 61131-2
EMC	EN 61000
ATEX	EN 60079
UL	
MSIP	MSIP-REM-WMG-2457240000

Ordering data

Module variants		
Type	**Qty.**	**Order No.**
UR20-8DI-ISO-2W	1	**2457240000**
Note		

Accessories

Type	**Qty.**	**Order No.**
Coding elements	KOSM BHZ5.00	100	**1483050000**
Termination kit	UR20-EBK-ACC	5	**1346610000**
Swievel marker	UR20-SM-ACC	20	**1339920000**
Connection marker for pusher custom printing	PM 2.7/2.6 MC SDR	192	**1323700000**
Connection marker for pusher neutral	PM 2.7/2.6 MC NE WS	960	**1323710000**
Module marker for custom printing	DEK 5/8-11.5 MC SDR	100	**1341610000**
Module marker for neutral	DEK 5/8-11.5 MC NE WS	500	**1341630000**
Thermotransfer version (Material: Polyester)	THM UR20 GE	1	**1429910000**
Thermotransfer version (material: polyester)	THM UR20 WS	1	**1429420000**
Paper version for Laserprinter	ESO UR20 DIN A4 WS	10	**1429430000**
PLC interface element	RS 16IO 1W H S	1	**9445700000**
Pre-assembled cable, 1m	PAC-UNIV-HE20-LCH-1M	1	**7789306010**
Replacement parts			
Electronic module	UR20-EM-2457240000-SP	1	**2545780000**
Basic module	UR20-BM-SP	5	**1350930000**
Plug-in connector unit	UR20-PK-2457240000-SP	5	**2545760000**
Note	1 roll = 1000 label = 1 Qty. 1 sheet = 60 label = 1 Qty.		

4DI-2W-230V-AC

- 4 digital inputs for sensors such as transmitters, switches and proximity sensors
- Input filter can be set channel by channel
- Galvanic isolation by 4 kV
- Positive switching
- 2-wire connection
- Types 3 acc. to IEC 61131-2

UR20-4DI-2W-230V-AC

Technical data

System data	
Interface	u-remote system bus
Transmission speed of system bus, max.	48 Mbit
Galvanic isolation	4 kV between channels and power supply
Line-to-line voltage	400 V is possible between the channels
Supply	
Voltage supply	24 V DC +20 %/ -15 %, via the system bus
Current consumption I_{IN} (power segment of the field bus coupler), typ.	8 mA
Digital inputs	
Number of digital inputs	4
Type	Types 1 and 3, EN 61131-2
Input filter	configurable, 10 ms
Input voltage, low	< 65 V
Input voltage, high	≥ 80 V
Supply voltage (input)	277 V AC (UL), 265 V AC (VDE)
Input frequency	50 Hz, 60 Hz
Sensor supply	No
Sensor connection	2-wire
Module diagnosis	Yes
Individual channel diagnosis	No
General data	
Weight	89 g
Dimensions H x W x D	120 mm / 11.5 mm / 76 mm
Note	

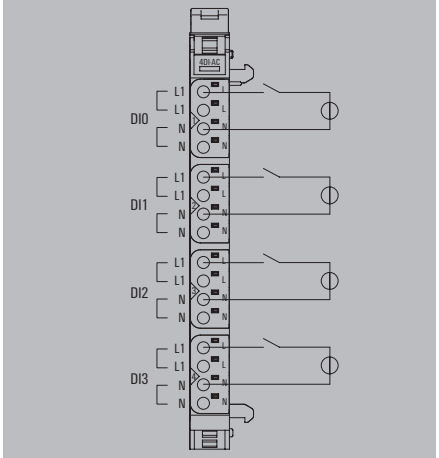

Product standard	IEC 61131-2
EMC	EN 61000
ATEX	EN 60079
UL	UL 61010-2-201
MSIP	MSIP-REM-WMG-1550070000
ABS (American Bureau of Shipping)	
BSH (Federal Maritime and Hydrographic Agency of Germany)	
BV (Bureau Veritas)	
DNV GL (Det Norske Veritas) (Germanischer Lloyd)	
LR (Lloyd's Register)	
RINA (Registro Italiano Navale)	

Ordering data

Module variants	Type	Qty.	Order No.
Digital input module, 4 channels, 230V AC	UR20-4DI-2W-230V-AC	1	**1550070000**
Note			

Accessories

	Type	Qty.	Order No.
Coding elements	KOSM BHZ5.00	100	**1483050000**
Termination kit	UR20-EBK-ACC	5	**1346610000**
Swievel marker	UR20-SM-ACC	20	**1339920000**
Connection marker for pusher custom printing	PM 2.7/2.6 MC SDR	192	**1323700000**
Connection marker for pusher neutral	PM 2.7/2.6 MC NE WS	960	**1323710000**
Module marker for custom printing	DEK 5/8-11.5 MC SDR	100	**1341610000**
Module marker for neutral	DEK 5/8-11.5 MC NE WS	500	**1341630000**
Thermotransfer version (Material: Polyester)	THM UR20 GE	1	**1429910000**
Thermotransfer version (material: polyester)	THM UR20 WS	1	**1429420000**
Paper version for Laserprinter	ESO UR20 DIN A4 WS	10	**1429430000**
Replacement parts			
Electronic module	UR20-EM-1550070000-SP	1	**1558880000**
Basic module	UR20-BM-SP	5	**1350930000**
Plug-in connector unit	UR20-PK-1550070000-SP	5	**1559820000**
Note	1 roll = 1000 label = 1 Qty. 1 sheet = 60 label = 1 Qty.		

Digital output modules

P- or N-switching; short-circuit-proof; up to 3-wire+FE

Digital output modules are available in the following variants: 4DO, 8DO with 2-wire technology, 16DO with or without PLC interface connection. They are used primarily for incorporating decentralised actuators. The digital output modules are available as P- or N-switching variant. All outputs are designed for DC-13 actuators acc. to DIN EN 60947-5-1 and IEC 61131-2 specifications. Just like the digital input modules, frequencies of up to 1 kHz are possible. Maximum system safety is ensured by protecting the outputs. This consists of an automatic restart following a short-circuit. Clearly recognisable LEDs also signal the status of the entire module as well as individual channels.

In addition to the standard applications of the digital output modules, the portfolio also includes special variants, such as the 4RO-SSR module for rapidly switching applications. Fitted with solid state technology, 0.5 A is available for each output. Furthermore, there is also the 4RO-CO relay module for power-intensive applications. This is equipped with four change-over contacts, optimised for a switching voltage of 277 V AC and designed for a switching current of 6 A.
To serve negative switching requirements there is a parameterisable version of the 4-DO Module.

The module electronics supply the connected actuators from the output current path (U_{OUT}).

UR20-4DO-P

UR20-4DO-P-2A

UR20-4DO-PN-2A

UR20-8DO-P

UR20-8DO-P-2W-HD

UR20-16DO-P

UR20-16DO-P-PLC-INT

UR20-4DO-N

UR20-4DO-N-2A

UR20-8DO-N

UR20-16DO-N

UR20-16DO-N-PLC-INT

UR20-4DO-ISO-4A

UR20-4RO-SSR-255

UR20-4RO-CO-255

4DO-P

- 4 digital outputs
- Can be loaded up to 0.5 A per channel
- Short-circuit-proof
- 2-wire, 3-wire, 3-wire+FE connection
- Positive switching
- DC-13 load
- IEC 61131-2 compliant

UR20-4DO-P

Technical data

System data	
Interface	u-remote system bus
Transmission speed of system bus, max.	48 Mbit
Galvanic isolation	500 V DC between the current paths
Supply	
Voltage supply	24 V DC +20 %/ -15 %, via the system bus
Current consumption I_{IN} (power segment of the field bus coupler), typ.	8 mA
Current consumption from I_{OUT} (the respective power segment)	10 mA + load
Digital outputs	
Number of digital outputs	4
Type	Lamp load, Ohmic, Inductive
Max. response time, high	100 µs
Max. response time, low	250 µs
Output current per channel, max.	500 mA
Output current per module, max.	2000 mA
Switching frequenz max. Resistive load (min. 47 Ω)	1 kHz
Switching frequenz max. Inductive load (DC13)	0.2 Hz
Switching frequenz max. Lamp load (12 W)	1 kHz
Actuator connection	2-wire, 3-wire, 3-wire + FE
Short-circuit-proof	Yes (thermal cut-out)
Feedback-free	Yes
Module diagnosis	Yes
Individual channel diagnosis	No
Switch-off energy (inductive)	< 150 mJ / channel
Response time of the protective circuit (current limiting)	< 100µs
General data	
Weight	86 g
Dimensions H x W x D	120 mm / 11.5 mm / 76 mm
Note	

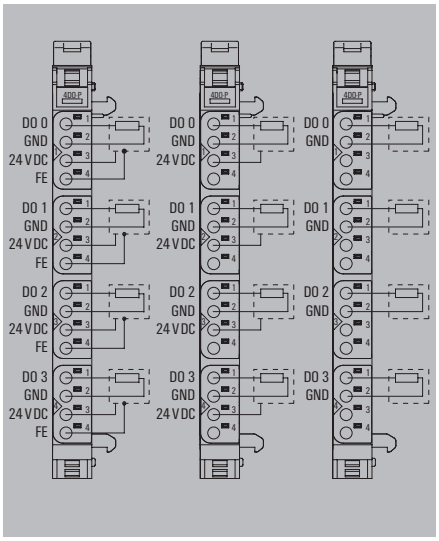

Product standard	IEC 61131-2
EMC	EN 61000
ATEX	EN 60079
UL	UL 61010-2-201
MSIP	MSIP-REM-WMG-1315220000

ABS (American Bureau of Shipping)
BSH (Federal Maritime and Hydrographic Agency of Germany)
BV (Bureau Veritas)
DNV GL (Det Norske Veritas) (Germanischer Lloyd)
LR (Lloyd's Register)
RINA (Registro Italiano Navale)

Ordering data

Module variants	Type	Qty.	Order No.
Digital output module, 4 channels	UR20-4DO-P	1	1315220000
Note			

Accessories

	Type	Qty.	Order No.
Coding elements	KOSM BHZ5.00	100	1483050000
Termination kit	UR20-EBK-ACC	5	1346610000
Swievel marker	UR20-SM-ACC	20	1339920000
Connection marker for pusher custom printing	PM 2.7/2.6 MC SDR	192	1323700000
Connection marker for pusher neutral	PM 2.7/2.6 MC NE WS	960	1323710000
Module marker for custom printing	DEK 5/8-11.5 MC SDR	100	1341610000
Module marker for neutral	DEK 5/8-11.5 MC NE WS	500	1341630000
Thermotransfer version (Material: Polyester)	THM UR20 GE	1	1429910000
Thermotransfer version (material: polyester)	THM UR20 WS	1	1429420000
Paper version for Laserprinter	ESO UR20 DIN A4 WS	10	1429430000
Replacement parts			
Electronic module	UR20-EM-1315220000-SP	1	1346700000
Basic module	UR20-BM-SP	5	1350930000
Plug-in connector unit	UR20-PK-1315220000-SP	5	1483960000
Note	1 roll = 1000 label = 1 Qty. 1 sheet = 60 label = 1 Qty.		

4DO-P-2A

- 4 digital outputs
- Module can be loaded up to 8 A
- Can be loaded up to 2 A per channel
- Short-circuit-proof
- 2-wire, 3-wire, 3-wire+FE connection
- Positive switching
- DC-13 load
- IEC 61131-2 compliant

UR20-4DO-P-2A

Technical data

System data	
Interface	u-remote system bus
Transmission speed of system bus, max.	48 Mbit
Galvanic isolation	500 V DC between the current paths
Supply	
Voltage supply	24 V DC +20 %/ -15 %, via the system bus
Current consumption I_{IN} (power segment of the field bus coupler), typ.	8 mA
Current consumption from I_{OUT} (the respective power segment)	10 mA + load
Digital outputs	
Number of digital outputs	4
Type	Lamp load, Ohmic, Inductive
Max. response time, high	100 µs
Max. response time, low	250 µs
Output current per channel, max.	2000 mA
Output current per module, max.	8000 mA
Switching frequenz max. Resistive load (min. 47 Ω)	1 kHz
Switching frequenz max. Inductive load (DC13)	0.2 Hz
Switching frequenz max. Lamp load (12 W)	1 kHz
Actuator connection	2-wire, 3-wire, 3-wire + FE
Short-circuit-proof	Yes (thermal cut-out)
Feedback-free	Yes
Module diagnosis	Yes
Individual channel diagnosis	No
Switch-off energy (inductive)	< 150 mJ / channel
Response time of the protective circuit (current limiting)	< 100µs
General data	
Weight	85 g
Dimensions H x W x D	120 mm / 11.5 mm / 76 mm
Note	

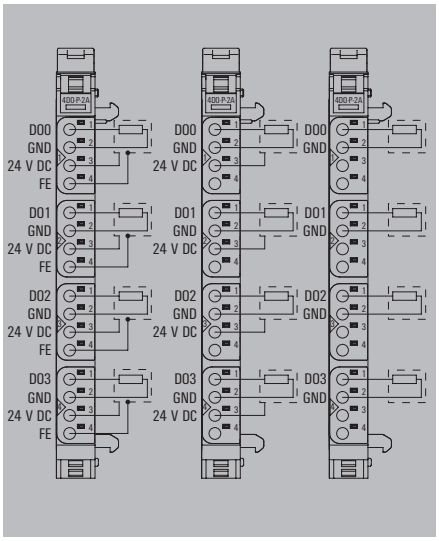

Product standard	IEC 61131-2
EMC	EN 61000
ATEX	EN 60079
UL	UL 61010-2-201
MSIP	MSIP-REM-WMG-1315230000

ABS (American Bureau of Shipping)
BSH (Federal Maritime and Hydrographic Agency of Germany)
BV (Bureau Veritas)
DNV GL (Det Norske Veritas) (Germanischer Lloyd)
LR (Lloyd's Register)
RINA (Registro Italiano Navale)

Ordering data

Module variants	Type	Qty.	Order No.
Digital output module, 4 channels, 2 A	UR20-4DO-P-2A	1	1315230000
Note			

Accessories

	Type	Qty.	Order No.
Coding elements	KOSM BHZ5.00	100	1483050000
Termination kit	UR20-EBK-ACC	5	1346610000
Swievel marker	UR20-SM-ACC	20	1339920000
Connection marker for pusher custom printing	PM 2.7/2.6 MC SDR	192	1323700000
Connection marker for pusher neutral	PM 2.7/2.6 MC NE WS	960	1323710000
Module marker for custom printing	DEK 5/8-11.5 MC SDR	100	1341610000
Module marker for neutral	DEK 5/8-11.5 MC NE WS	500	1341630000
Thermotransfer version (Material: Polyester)	THM UR20 GE	1	1429910000
Thermotransfer version (material: polyester)	THM UR20 WS	1	1429420000
Paper version for Laserprinter	ESO UR20 DIN A4 WS	10	1429430000
Replacement parts			
Electronic module	UR20-EM-1315230000-SP	1	1346710000
Basic module	UR20-BM-SP	5	1350930000
Plug-in connector unit	UR20-PK-1315230000-SP	5	1483970000
Note	1 roll = 1000 label = 1 Qty. 1 sheet = 60 label = 1 Qty.		

4DO-PN-2A

- 4 digital outputs
- Module can be loaded up to 8 A
- Can be loaded up to 2 A per channel
- Short-circuit-proof
- Positive or negative switching
- 2-wire, 3-wire, 3-wire+FE connection
- IEC 61131-2 compliant

UR20-4DO-PN-2A

Technical data

System data	
Interface	u-remote system bus
Transmission speed of system bus, max.	48 Mbit
Galvanic isolation	500 V DC between the current paths
Supply	
Voltage supply	24 V DC +20 %/ -15 %, via the system bus
Current consumption I_{IN} (power segment of the field bus coupler), typ.	8 mA
Current consumption from I_{OUT} (the respective power segment)	10 mA + load
Digital outputs	
Number of digital outputs	4
Positive or negative switching	Positive or negative switching
Type	Inductive, Ohmic, Lamp load
Max. response time, high	100 µs
Max. response time, low	250 µs
Output current per channel, max.	2 A
Output current per module, max.	8000 mA
Switching frequenz max. Resistive load (min. 47 Ω)	1 kHz
Switching frequenz max. Inductive load (DC13)	2 Hz
Switching frequenz max. Lamp load (12 W)	1 kHz
Actuator connection	2-wire, 3-wire, 3-wire + FE
Short-circuit-proof	Yes (thermal cut-out)
Feedback-free	Yes
Module diagnosis	Yes
Individual channel diagnosis	No
Switch-off energy (inductive)	< 150 mJ / channel
Response time of the protective circuit (current limiting)	< 100µs
General data	
Weight	85 g
Dimensions H x W x D	120 mm / 11.5 mm / 76 mm
Note	

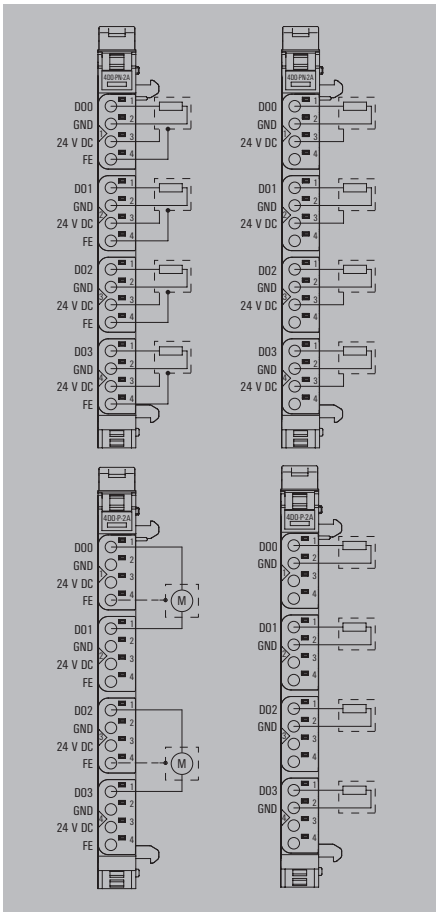

Ordering data

Module variants	Type	Qty.	Order No.
Digital output module, 4 channels	UR20-4DO-PN-2A	1	1394420000
Note			

Accessories

	Type	Qty.	Order No.
Coding elements	KOSM BHZ5.00	100	1483050000
Termination kit	UR20-EBK-ACC	5	1346610000
Swivel marker	UR20-SM-ACC	20	1339920000
Connection marker for pusher custom printing	PM 2.7/2.6 MC SDR	192	1323700000
Connection marker for pusher neutral	PM 2.7/2.6 MC NE WS	960	1323710000
Module marker for custom printing	DEK 5/8-11.5 MC SDR	100	1341610000
Module marker for neutral	DEK 5/8-11.5 MC NE WS	500	1341630000
Thermotransfer version (Material: Polyester)	THM UR20 GE	1	1429910000
Thermotransfer version (material: polyester)	THM UR20 WS	1	1429420000
Paper version for Laserprinter	ESO UR20 DIN A4 WS	10	1429430000
Replacement parts			
Electronic module	UR20-EM-1394420000-SP	1	1480950000
Basic module	UR20-BM-SP	5	1350930000
Plug-in connector unit	UR20-PK-1394420000-SP	5	1483980000
Note	1 roll = 1000 label = 1 Qty. 1 sheet = 60 label = 1 Qty.		

Product standard	IEC 61131-2
EMC	EN 61000
ATEX	EN 60079
UL	UL 61010-2-201
MSIP	MSIP-REM-WMG-1394420000
ABS (American Bureau of Shipping)	
BSH (Federal Maritime and Hydrographic Agency of Germany)	
BV (Bureau Veritas)	
DNV GL (Det Norske Veritas) (Germanischer Lloyd)	
LR (Lloyd's Register)	
RINA (Registro Italiano Navale)	

8DO-P

- 8 digital outputs
- Can be loaded up to 0.5 A per channel
- Short-circuit-proof
- 2-wire connection
- Positive switching
- DC-13 load
- IEC 61131-2 compliant

UR20-8DO-P

Technical data

System data	
Interface	u-remote system bus
Transmission speed of system bus, max.	48 Mbit
Galvanic isolation	500 V DC between the current paths
Supply	
Voltage supply	24 V DC +20 %/ -15 %, via the system bus
Current consumption I_{IN} (power segment of the field bus coupler), typ.	8 mA
Current consumption from I_{OUT} (the respective power segment)	15 mA + load
Digital outputs	
Number of digital outputs	8
Type	Lamp load, Ohmic, Inductive
Max. response time, high	100 µs
Max. response time, low	250 µs
Output current per channel, max.	500 mA
Output current per module, max.	4000 mA
Switching frequenz max. Resistive load (min. 47 Ω)	1 kHz
Switching frequenz max. Inductive load (DC13)	0.2 Hz
Switching frequenz max. Lamp load (12 W)	1 kHz
Actuator connection	2-wire
Short-circuit-proof	Yes (thermal cut-out)
Feedback-free	Yes
Module diagnosis	Yes
Individual channel diagnosis	No
Switch-off energy (inductive)	< 150 mJ / channel
Response time of the protective circuit (current limiting)	< 100µs
General data	
Weight	87 g
Dimensions H x W x D	120 mm / 11.5 mm / 76 mm
Note	

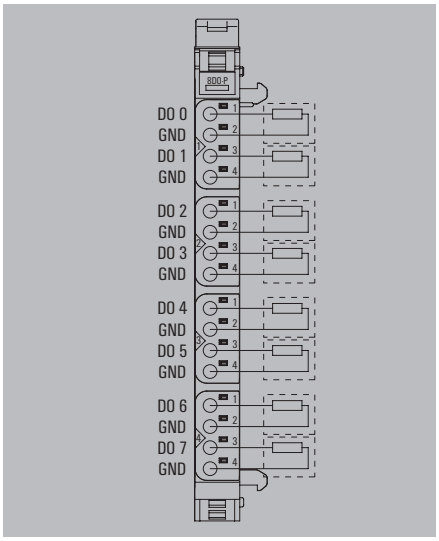

Product standard	IEC 61131-2
EMC	EN 61000
ATEX	EN 60079
UL	UL 61010-2-201
MSIP	MSIP-REM-WMG-1315240000

ABS (American Bureau of Shipping)
BSH (Federal Maritime and Hydrographic Agency of Germany)
BV (Bureau Veritas)
DNV GL (Det Norske Veritas) (Germanischer Lloyd)
LR (Lloyd's Register)
RINA (Registro Italiano Navale)

Ordering data

Module variants	Type	Qty.	Order No.
Digital output module, 8 channels	UR20-8DO-P	1	1315240000
Note	For this and additional technical data, please refer to the manual available at www.weidmueller.de..		

Accessories

	Type	Qty.	Order No.
Coding elements	KOSM BHZ5.00	100	1483050000
Termination kit	UR20-EBK-ACC	5	1346610000
Swievel marker	UR20-SM-ACC	20	1339920000
Connection marker for pusher custom printing	PM 2.7/2.6 MC SDR	192	1323700000
Connection marker for pusher neutral	PM 2.7/2.6 MC NE WS	960	1323710000
Module marker for custom printing	DEK 5/8-11.5 MC SDR	100	1341610000
Module marker for neutral	DEK 5/8-11.5 MC NE WS	500	1341630000
Thermotransfer version (Material: Polyester)	THM UR20 GE	1	1429910000
Thermotransfer version (material: polyester)	THM UR20 WS	1	1429420000
Paper version for Laserprinter	ESO UR20 DIN A4 WS	10	1429430000
Replacement parts			
Electronic module	UR20-EM-1315240000-SP	1	1346720000
Basic module	UR20-BM-SP	5	1350930000
Plug-in connector unit	UR20-PK-1315240000-SP	5	1346410000
Note	1 roll = 1000 label = 1 Qty. 1 sheet = 60 label = 1 Qty.		

8DO-P-2W-HD

- 8 digital outputs
- Can be loaded up to 0.5 A per channel
- Short-circuit-proof
- 2-wire connection
- Positive switching
- DC-13 load
- IEC 61131-2 compliant

UR20-8DO-P-2W-HD

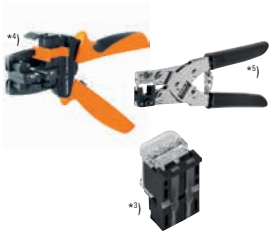

Note: Please order connector separately

Technical data

System data	
Interface	u-remote system bus
Transmission speed of system bus, max.	48 Mbit
Galvanic isolation	500 V DC between the current paths
Supply	
Voltage supply	24 V DC +20 %/ -15 %, via the system bus
Current consumption I_{IN} (power segment of the field bus coupler), typ.	8 mA
Current consumption from I_{OUT} (the respective power segment)	40 mA
Digital outputs	
Number of digital outputs	8
Type	Lamp load, Ohmic, Inductive
Max. response time, high	50 µs
Max. response time, low	100 µs
Output current per channel, max.	500 mA
Output current per module, max.	4000 mA
Switching frequenz max. Resistive load (min. 47 Ω)	1 kHz
Switching frequenz max. Inductive load (DC13)	0.2 Hz
Switching frequenz max. Lamp load (12 W)	1 kHz
Actuator connection	2-wire
Short-circuit-proof	Yes (thermal cut-out)
Feedback-free	Yes
Module diagnosis	Yes
Individual channel diagnosis	No
Switch-off energy (inductive)	< 150 mJ / channel
Response time of the protective circuit (current limiting)	< 100µs
General data	
Weight	66 g
Dimensions H x W x D	120 mm / 11.5 mm / 76 mm
Note	

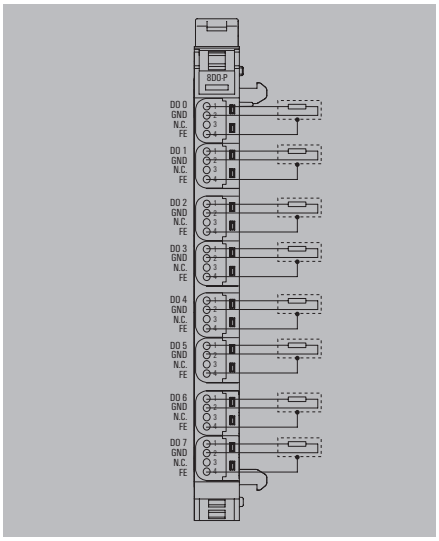

Product standard	IEC 61131-2
EMC	EN 61000
ATEX	EN 60079
UL	UL 61010-2-201
MSIP	MSIP-REM-WMG-1509830000

ABS (American Bureau of Shipping)
BSH (Federal Maritime and Hydrographic Agency of Germany)
BV (Bureau Veritas)
DNV GL (Det Norske Veritas) (Germanischer Lloyd)
LR (Lloyd's Register)
RINA (Registro Italiano Navale)

Ordering data

Module variants	Type	Qty.	Order No.
Digital output module, 8 channels, HD-plug	UR20-8DO-P-2W-HD	1	1509830000
Note			

Accessories

	Type	Qty.	Order No.
Coding elements	KOSM BHZ5.00	100	1483050000
Termination kit	UR20-EBK-ACC	5	1346610000
Swievel marker	UR20-SM-ACC	20	1339920000
*3) HD plug	UR20-PG0.35	8	1469340000
*4) Stripping tool	MULTI-STRIPAX 6-16	1	9202210000
*5) Pressing tool	PWZ-UR20-HD	1	1525820000
Module marker for custom printing	DEK 5/8-11.5 MC SDR	100	1341610000
Module marker for neutral	DEK 5/8-11.5 MC NE WS	500	1341630000
Thermotransfer version (Material: Polyester)	THM UR20 GE	1	1429910000
Thermotransfer version (material: polyester)	THM UR20 WS	1	1429420000
Paper version for Laserprinter	ESO UR20 DIN A4 WS	10	1429430000
Replacement parts			
Electronic module	UR20-EM-1509830000-SP	1	1515450000
Basic module	UR20-BM-SP	5	1350930000
Plug-in connector unit	UR20-PK-1509830000-SP	5	1559720000
Note	Note: please order plug (1469340000) separately.		

16DO-P

- 16 digital outputs
- Can be loaded up to 0.5 A per channel
- Short-circuit-proof
- 1-wire connection
- Positive switching
- DC-13 load
- IEC 61131-2 compliant

UR20-16DO-P

Technical data

System data	
Interface	u-remote system bus
Transmission speed of system bus, max.	48 Mbit
Galvanic isolation	500 V DC between the current paths
Supply	
Voltage supply	24 V DC +20 %/ -15 %, via the system bus
Current consumption I_{IN} (power segment of the field bus coupler), typ.	8 mA
Current consumption from I_{OUT} (the respective power segment)	20 mA + load
Digital outputs	
Number of digital outputs	16
Type	Ohmic, Inductive, Lamp load
Max. response time, high	100 µs
Max. response time, low	250 µs
Output current per channel, max.	500 mA
Output current per module, max.	8000 mA
Switching frequenz max. Resistive load (min. 47 Ω)	1 kHz
Switching frequenz max. Inductive load (DC13)	0.2 Hz
Switching frequenz max. Lamp load (12 W)	1 kHz
Actuator connection	Single-conductor
Short-circuit-proof	Yes (thermal cut-out)
Feedback-free	Yes
Module diagnosis	Yes
Individual channel diagnosis	No
Switch-off energy (inductive)	< 150 mJ / channel
Response time of the protective circuit (current limiting)	< 100µs
General data	
Weight	83 g
Dimensions H x W x D	120 mm / 11.5 mm / 76 mm
Note	

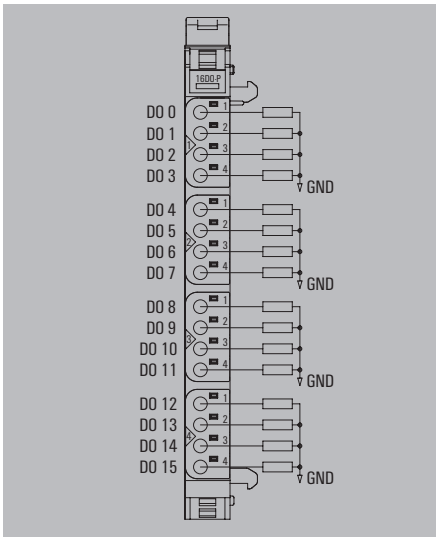

Product standard	IEC 61131-2
EMC	EN 61000
ATEX	EN 60079
UL	UL 61010-2-201
MSIP	MSIP-REM-WMG-1315250000

ABS (American Bureau of Shipping)
BSH (Federal Maritime and Hydrographic Agency of Germany)
BV (Bureau Veritas)
DNV GL (Det Norske Veritas) (Germanischer Lloyd)
LR (Lloyd's Register)
RINA (Registro Italiano Navale)

Ordering data

Module variants	Type	Qty.	Order No.
Digital output module, 16 channels	UR20-16DO-P	1	1315250000
Note	For this and additional technical data, please refer to the manual available at www.weidmueller.de..		

Accessories

	Type	Qty.	Order No.
Coding elements	KOSM BHZ5.00	100	1483050000
Termination kit	UR20-EBK-ACC	5	1346610000
Swievel marker	UR20-SM-ACC	20	1339920000
Connection marker for pusher custom printing	PM 2.7/2.6 MC SDR	192	1323700000
Connection marker for pusher neutral	PM 2.7/2.6 MC NE WS	960	1323710000
Module marker for custom printing	DEK 5/8-11.5 MC SDR	100	1341610000
Module marker for neutral	DEK 5/8-11.5 MC NE WS	500	1341630000
Thermotransfer version (Material: Polyester)	THM UR20 GE	1	1429910000
Thermotransfer version (material: polyester)	THM UR20 WS	1	1429420000
Paper version for Laserprinter	ESO UR20 DIN A4 WS	10	1429430000
Replacement parts			
Electronic module	UR20-EM-1315250000-SP	1	1346730000
Basic module	UR20-BM-SP	5	1350930000
Plug-in connector unit	UR20-PK-1315250000-SP	5	1483990000
Note	1 roll = 1000 label = 1 Qty. 1 sheet = 60 label = 1 Qty.		

16DO-P-PLC-INT

- 16 digital outputs
- Can be loaded up to 0.5 A per channel
- Short-circuit-proof
- For connecting a PLC interface element
- Positive switching
- DC-13 load
- IEC 61131-2 compliant

UR20-16DO-P-PLC-INT

Technical data

System data	
Interface	u-remote system bus
Transmission speed of system bus, max.	48 Mbit
Galvanic isolation	500 V DC between the current paths
Supply	
Voltage supply	24 V DC +20 %/ -15 %, via the system bus
Current consumption I_{IN} (power segment of the field bus coupler), typ.	8 mA
Current consumption from I_{OUT} (the respective power segment)	20 mA + load
Digital outputs	
Number of digital outputs	16
Type	Lamp load, Ohmic, Inductive
Max. response time, high	100 µs
Max. response time, low	250 µs
Output current per channel, max.	500 mA
Output current per module, max.	8000 mA
Switching frequenz max. Resistive load (min. 47 Ω)	1 kHz
Switching frequenz max. Inductive load (DC13)	0.2 Hz
Switching frequenz max. Lamp load (12 W)	1 kHz
Actuator connection	PLC-Interface
Short-circuit-proof	Yes (thermal cut-out)
Feedback-free	Yes
Module diagnosis	Yes
Individual channel diagnosis	No
Switch-off energy (inductive)	< 150 mJ / channel
Response time of the protective circuit (current limiting)	< 100µs
General data	
Weight	85 g
Dimensions H x W x D	120 mm / 11.5 mm / 76 mm
Note	In case of supply via the ribbon cable, the maximum output current per module is 2 A.

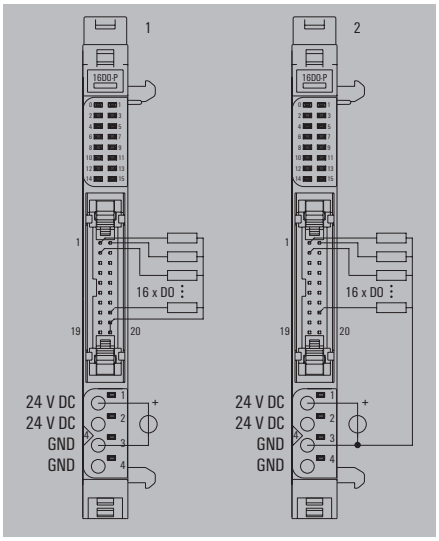

Product standard	IEC 61131-2
EMC	EN 61000
ATEX	EN 60079
UL	UL 61010-2-201
MSIP	MSIP-REM-WMG-1315270000
ABS (American Bureau of Shipping)	
BSH (Federal Maritime and Hydrographic Agency of Germany)	
BV (Bureau Veritas)	
DNV GL (Det Norske Veritas) (Germanischer Lloyd)	
LR (Lloyd's Register)	
RINA (Registro Italiano Navale)	

Ordering data

Module variants	Type	Qty.	Order No.
Digital output module, 16 channels, PLC interface	UR20-16DO-P-PLC-INT	1	1315270000
Note			

Accessories

	Type	Qty.	Order No.
Coding elements	KOSM BHZ5.00	100	1483050000
Termination kit	UR20-EBK-ACC	5	1346610000
Swievel marker	UR20-SM-ACC	20	1339920000
Connection marker for pusher custom printing	PM 2.7/2.6 MC SDR	192	1323700000
Connection marker for pusher neutral	PM 2.7/2.6 MC NE WS	960	1323710000
Module marker for custom printing	DEK 5/8-11.5 MC SDR	100	1341610000
Module marker for neutral	DEK 5/8-11.5 MC NE WS	500	1341630000
Thermotransfer version (Material: Polyester)	THM UR20 GE	1	1429910000
Thermotransfer version (material: polyester)	THM UR20 WS	1	1429420000
Paper version for Laserprinter	ESO UR20 DIN A4 WS	10	1429430000
PLC interface element	RS 16IO 1W H S	1	9445700000
Pre-assembled cable, 1m	PAC-UNIV-HE20-LCH-1M	1	7789306010
Replacement parts			
Electronic module	UR20-EM-1315270000-SP	1	1346740000
Basic module	UR20-BM-SP	5	1350930000
Plug-in connector unit	UR20-PK-1315270000-SP	5	1483940000
Note	1 roll = 1000 label = 1 Qty. 1 sheet = 60 label = 1 Qty.		

4DO-N

- 4 digital outputs
- Can be loaded up to 0.5 A per channel
- Short-circuit-proof
- 2-wire, 3-wire, 3-wire+FE connection
- Negative switching
- DC-13 load
- IEC 61131-2 compliant

UR20-4DO-N

Technical data

System data	
Interface	u-remote system bus
Transmission speed of system bus, max.	48 Mbit
Galvanic isolation	500 V DC between the current paths
Supply	
Voltage supply	24 V DC +20 %/ -15 %, via the system bus
Current consumption I_{IN} (power segment of the field bus coupler), typ.	8 mA
Current consumption from I_{OUT} (the respective power segment)	10 mA + load
Digital outputs	
Number of digital outputs	4
Type	Lamp load, Ohmic, Inductive
Max. response time, high	100 µs
Max. response time, low	250 µs
Output current per channel, max.	500 mA
Output current per module, max.	2000 mA
Switching frequenz max. Resistive load (min. 47 Ω)	1 kHz
Switching frequenz max. Inductive load (DC13)	2 Hz
Switching frequenz max. Lamp load (12 W)	10 Hz
Actuator connection	2-wire, 3-wire, 3-wire + FE
Short-circuit-proof	Yes
Feedback-free	Yes
Module diagnosis	Yes
Individual channel diagnosis	No
Switch-off energy (inductive)	< 150 mJ / channel
Response time of the protective circuit (current limiting)	< 100µs
General data	
Weight	85 g
Dimensions H x W x D	120 mm / 11.5 mm / 76 mm
Note	

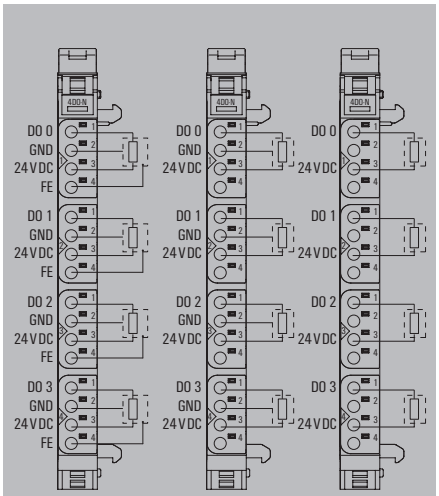

Product standard	IEC 61131-2
EMC	EN 61000
ATEX	EN 60079
UL	UL 61010-2-201
MSIP	MSIP-REM-WMG-1315410000

ABS (American Bureau of Shipping)
BSH (Federal Maritime and Hydrographic Agency of Germany)
BV (Bureau Veritas)
DNV GL (Det Norske Veritas) (Germanischer Lloyd)
LR (Lloyd's Register)
RINA (Registro Italiano Navale)

Ordering data

Module variants	Type	Qty.	Order No.
Digital output module, 4 channels	UR20-4DO-N	1	1315410000
Note			

Accessories

	Type	Qty.	Order No.
Coding elements	KOSM BHZ5.00	100	1483050000
Termination kit	UR20-EBK-ACC	5	1346610000
Swievel marker	UR20-SM-ACC	20	1339920000
Connection marker for pusher custom printing	PM 2.7/2.6 MC SDR	192	1323700000
Connection marker for pusher neutral	PM 2.7/2.6 MC NE WS	960	1323710000
Module marker for custom printing	DEK 5/8-11.5 MC SDR	100	1341610000
Module marker for neutral	DEK 5/8-11.5 MC NE WS	500	1341630000
Thermotransfer version (Material: Polyester)	THM UR20 GE	1	1429910000
Thermotransfer version (material: polyester)	THM UR20 WS	1	1429420000
Paper version for Laserprinter	ESO UR20 DIN A4 WS	10	1429430000
Replacement parts			
Electronic module	UR20-EM-1315410000-SP	1	1346940000
Basic module	UR20-BM-SP	5	1350930000
Plug-in connector unit	UR20-PK-1315410000-SP	5	1559840000
Note	1 roll = 1000 label = 1 Qty. 1 sheet = 60 label = 1 Qty.		

4DO-N-2A

- 4 digital outputs
- Module can be loaded up to 8 A
- Can be loaded up to 2 A per channel
- Short-circuit-proof
- 2-wire, 3-wire, 3-wire+FE connection
- Negative switching
- DC-13 load
- IEC 61131-2 compliant

UR20-4DO-N-2A

Technical data

System data	
Interface	u-remote system bus
Transmission speed of system bus, max.	48 Mbit
Galvanic isolation	500 V DC between the current paths
Supply	
Voltage supply	24 V DC +20 %/ -15 %, via the system bus
Current consumption I_{IN} (power segment of the field bus coupler), typ.	8 mA
Current consumption from I_{OUT} (the respective power segment)	10 mA + load
Digital outputs	
Number of digital outputs	4
Type	Lamp load, Ohmic, Inductive
Max. response time, high	100 µs
Max. response time, low	250 µs
Output current per channel, max.	2000 mA
Output current per module, max.	8000 mA
Switching frequenz max. Resistive load (min. 47 Ω)	1 kHz
Switching frequenz max. Inductive load (DC13)	2 Hz
Switching frequenz max. Lamp load (12 W)	10 Hz
Actuator connection	2-wire, 3-wire, 3-wire + FE
Short-circuit-proof	Yes
Feedback-free	Yes
Module diagnosis	Yes
Individual channel diagnosis	No
Switch-off energy (inductive)	< 150 mJ / channel
Response time of the protective circuit (current limiting)	< 100µs
General data	
Weight	86 g
Dimensions H x W x D	120 mm / 11.5 mm / 76 mm
Note	

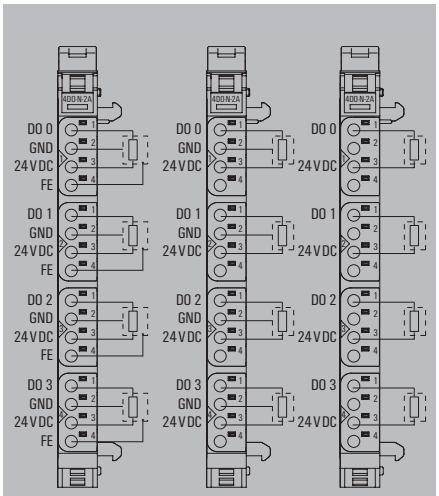

Product standard	IEC 61131-2
EMC	EN 61000
ATEX	EN 60079
UL	UL 61010-2-201
MSIP	MSIP-REM-WMG-1315420000

ABS (American Bureau of Shipping)
BSH (Federal Maritime and Hydrographic Agency of Germany)
BV (Bureau Veritas)
DNV GL (Det Norske Veritas) (Germanischer Lloyd)
LR (Lloyd's Register)
RINA (Registro Italiano Navale)

Ordering data

Module variants	Type	Qty.	Order No.
Digital output module, 4 channels, 2 A	UR20-4DO-N-2A	1	1315420000
Note			

Accessories

	Type	Qty.	Order No.
Coding elements	KOSM BHZ5.00	100	1483050000
Termination kit	UR20-EBK-ACC	5	1346610000
Swievel marker	UR20-SM-ACC	20	1339920000
Connection marker for pusher custom printing	PM 2.7/2.6 MC SDR	192	1323700000
Connection marker for pusher neutral	PM 2.7/2.6 MC NE WS	960	1323710000
Module marker for custom printing	DEK 5/8-11.5 MC SDR	100	1341610000
Module marker for neutral	DEK 5/8-11.5 MC NE WS	500	1341630000
Thermotransfer version (Material: Polyester)	THM UR20 GE	1	1429910000
Thermotransfer version (material: polyester)	THM UR20 WS	1	1429420000
Paper version for Laserprinter	ESO UR20 DIN A4 WS	10	1429430000
Replacement parts			
Electronic module	UR20-EM-1315420000-SP	1	1346950000
Basic module	UR20-BM-SP	5	1350930000
Plug-in connector unit	UR20-PK-1315420000-SP	5	1559850000
Note	1 roll = 1000 label = 1 Qty. 1 sheet = 60 label = 1 Qty.		

8DO-N

- 8 digital outputs
- Can be loaded up to 0.5 A per channel
- Short-circuit-proof
- 2-wire connection
- Negative switching
- DC-13 load
- IEC 61131-2 compliant

UR20-8DO-N

Technical data

System data	
Interface	u-remote system bus
Transmission speed of system bus, max.	48 Mbit
Galvanic isolation	500 V DC between the current paths
Supply	
Voltage supply	24 V DC +20 %/ -15 %, via the system bus
Current consumption I_{IN} (power segment of the field bus coupler), typ.	8 mA
Current consumption from I_{OUT} (the respective power segment)	15 mA + load
Digital outputs	
Number of digital outputs	8
Type	Lamp load, Ohmic, Inductive
Max. response time, high	100 µs
Max. response time, low	250 µs
Output current per channel, max.	500 mA
Output current per module, max.	4000 mA
Switching frequenz max. Resistive load (min. 47 Ω)	1 kHz
Switching frequenz max. Inductive load (DC13)	2 Hz
Switching frequenz max. Lamp load (12 W)	10 Hz
Actuator connection	2-wire
Short-circuit-proof	Yes
Feedback-free	Yes
Module diagnosis	Yes
Individual channel diagnosis	No
Switch-off energy (inductive)	< 150 mJ / channel
Response time of the protective circuit (current limiting)	< 100µs
General data	
Weight	86 g
Dimensions H x W x D	120 mm / 11.5 mm / 76 mm
Note	

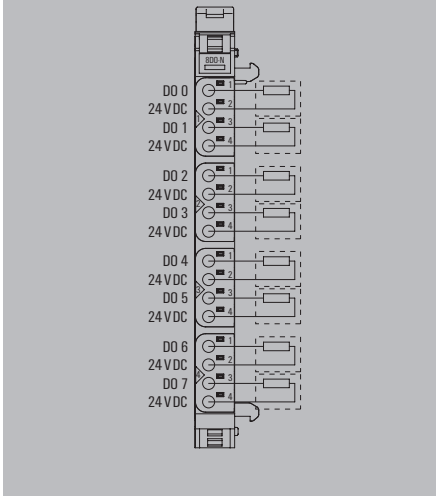

Product standard	IEC 61131-2
EMC	EN 61000
ATEX	EN 60079
UL	UL 61010-2-201
MSIP	MSIP-REM-WMG-1315430000

ABS (American Bureau of Shipping)
BSH (Federal Maritime and Hydrographic Agency of Germany)
BV (Bureau Veritas)
DNV GL (Det Norske Veritas) (Germanischer Lloyd)
LR (Lloyd's Register)
RINA (Registro Italiano Navale)

Ordering data

Module variants	Type	Qty.	Order No.
Digital output module, 8 channels	UR20-8DO-N	1	1315430000
Note			

Accessories

	Type	Qty.	Order No.
Coding elements	KOSM BHZ5.00	100	1483050000
Termination kit	UR20-EBK-ACC	5	1346610000
Swievel marker	UR20-SM-ACC	20	1339920000
Connection marker for pusher custom printing	PM 2.7/2.6 MC SDR	192	1323700000
Connection marker for pusher neutral	PM 2.7/2.6 MC NE WS	960	1323710000
Module marker for custom printing	DEK 5/8-11.5 MC SDR	100	1341610000
Module marker for neutral	DEK 5/8-11.5 MC NE WS	500	1341630000
Thermotransfer version (Material: Polyester)	THM UR20 GE	1	1429910000
Thermotransfer version (material: polyester)	THM UR20 WS	1	1429420000
Paper version for Laserprinter	ESO UR20 DIN A4 WS	10	1429430000
Replacement parts			
Electronic module	UR20-EM-1315430000-SP	1	1346970000
Basic module	UR20-BM-SP	5	1350930000
Plug-in connector unit	UR20-PK-1315430000-SP	5	1984770000
Note	1 roll = 1000 label = 1 Qty. 1 sheet = 60 label = 1 Qty.		

16DO-N

- 16 digital outputs
- Can be loaded up to 0.5 A per channel
- Short-circuit-proof
- 1-wire connection
- Negative switching
- DC-13 load
- IEC 61131-2 compliant

UR20-16DO-N

Technical data

System data	
Interface	u-remote system bus
Transmission speed of system bus, max.	48 Mbit
Galvanic isolation	500 V DC between the current paths
Supply	
Voltage supply	24 V DC +20 %/ -15 %, via the system bus
Current consumption I_{IN} (power segment of the field bus coupler), typ.	8 mA
Current consumption from I_{OUT} (the respective power segment)	40 mA
Digital outputs	
Number of digital outputs	16
Type	Ohmic, Inductive, Lamp load
Max. response time, high	100 µs
Max. response time, low	250 µs
Output current per channel, max.	500 mA
Output current per module, max.	8000 mA
Switching frequenz max. Resistive load (min. 47 Ω)	1 kHz
Switching frequenz max. Inductive load (DC13)	0.2 Hz
Switching frequenz max. Lamp load (12 W)	10 Hz
Actuator connection	Single-conductor
Short-circuit-proof	Yes (thermal cut-out)
Feedback-free	Yes
Module diagnosis	Yes
Individual channel diagnosis	No
Switch-off energy (inductive)	< 150 mJ / channel
Response time of the protective circuit (current limiting)	< 100µs
General data	
Weight	87 g
Dimensions H x W x D	120 mm / 11.5 mm / 76 mm
Note	

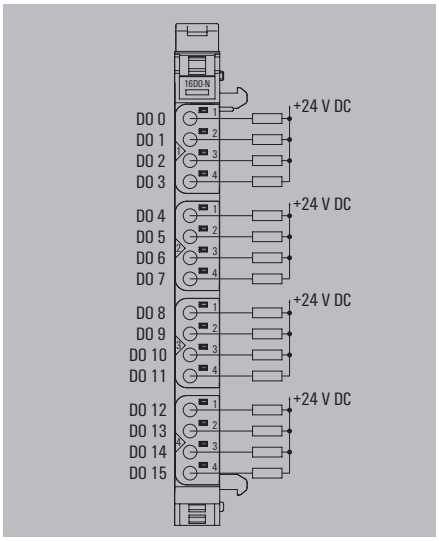

Product standard	IEC 61131-2
EMC	EN 61000
ATEX	EN 60079
UL	UL 61010-2-201
MSIP	MSIP-REM-WMG-1315440000

ABS (American Bureau of Shipping)
BSH (Federal Maritime and Hydrographic Agency of Germany)
BV (Bureau Veritas)
DNV GL (Det Norske Veritas) (Germanischer Lloyd)
LR (Lloyd's Register)
RINA (Registro Italiano Navale)

Ordering data

Module variants	Type	Qty.	Order No.
Digital output module, 16 channels	UR20-16DO-N	1	1315440000
Note			

Accessories

	Type	Qty.	Order No.
Coding elements	KOSM BHZ5.00	100	1483050000
Termination kit	UR20-EBK-ACC	5	1346610000
Swievel marker	UR20-SM-ACC	20	1339920000
Connection marker for pusher custom printing	PM 2.7/2.6 MC SDR	192	1323700000
Connection marker for pusher neutral	PM 2.7/2.6 MC NE WS	960	1323710000
Module marker for custom printing	DEK 5/8-11.5 MC SDR	100	1341610000
Module marker for neutral	DEK 5/8-11.5 MC NE WS	500	1341630000
Thermotransfer version (Material: Polyester)	THM UR20 GE	1	1429910000
Thermotransfer version (material: polyester)	THM UR20 WS	1	1429420000
Paper version for Laserprinter	ESO UR20 DIN A4 WS	10	1429430000
Replacement parts			
Electronic module	UR20-EM-1315440000-SP	1	1346980000
Basic module	UR20-BM-SP	5	1350930000
Plug-in connector unit	UR20-PK-1315440000-SP	5	2000520000
Note	1 roll = 1000 label = 1 Qty. 1 sheet = 60 label = 1 Qty.		

16DO-N-PLC-INT

- 16 digital outputs
- Can be loaded up to 0.5 A per channel
- Short-circuit-proof
- For connecting a PLC interface element
- Negative switching
- DC-13 load
- IEC 61131-2 compliant

UR20-16DO-N-PLC-INT

Technical data

System data	
Interface	u-remote system bus
Transmission speed of system bus, max.	48 Mbit
Galvanic isolation	500 V DC between the current paths
Supply	
Voltage supply	24 V DC +20 %/ -15 %, via the system bus
Current consumption I_{IN} (power segment of the field bus coupler), typ.	8 mA
Current consumption from I_{OUT} (the respective power segment)	30 mA
Digital outputs	
Number of digital outputs	16
Type	Ohmic, Inductive, Lamp load
Max. response time, high	100 µs
Max. response time, low	250 µs
Output current per channel, max.	500 mA
Output current per module, max.	8000 mA
Switching frequenz max. Resistive load (min. 47 Ω)	1 kHz
Switching frequenz max. Inductive load (DC13)	0.2 Hz
Switching frequenz max. Lamp load (12 W)	10 Hz
Actuator connection	PLC-Interface
Short-circuit-proof	Yes (thermal cut-out)
Feedback-free	Yes
Module diagnosis	Yes
Individual channel diagnosis	No
Switch-off energy (inductive)	< 150 mJ / channel
Response time of the protective circuit (current limiting)	< 100µs
General data	
Weight	87 g
Dimensions H x W x D	120 mm / 11.5 mm / 76 mm
Note	

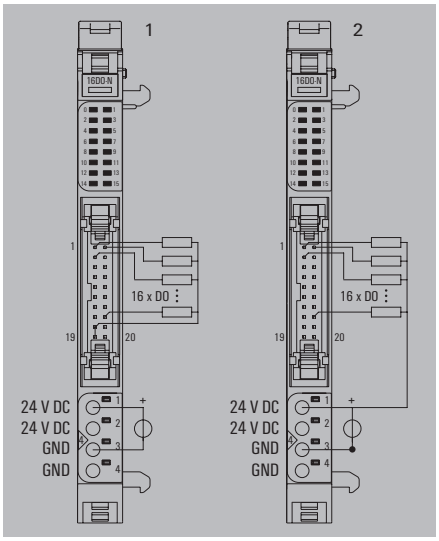

Product standard	IEC 61131-2
EMC	EN 61000
ATEX	EN 60079
UL	UL 61010-2-201
MSIP	MSIP-REM-WMG-1315450000
ABS (American Bureau of Shipping)	
BSH (Federal Maritime and Hydrographic Agency of Germany)	
BV (Bureau Veritas)	
DNV GL (Det Norske Veritas) (Germanischer Lloyd)	
LR (Lloyd's Register)	
RINA (Registro Italiano Navale)	

Ordering data

Module variants	Type	Qty.	Order No.
Digital output module, 16 channels, PLC interface	UR20-16DO-N-PLC-INT	1	1315450000
Note			

Accessories

	Type	Qty.	Order No.
Coding elements	KOSM BHZ5.00	100	1483050000
Termination kit	UR20-EBK-ACC	5	1346610000
Swievel marker	UR20-SM-ACC	20	1339920000
Connection marker for pusher custom printing	PM 2.7/2.6 MC SDR	192	1323700000
Connection marker for pusher neutral	PM 2.7/2.6 MC NE WS	960	1323710000
Module marker for custom printing	DEK 5/8-11.5 MC SDR	100	1341610000
Module marker for neutral	DEK 5/8-11.5 MC NE WS	500	1341630000
Thermotransfer version (Material: Polyester)	THM UR20 GE	1	1429910000
Thermotransfer version (material: polyester)	THM UR20 WS	1	1429420000
Paper version for Laserprinter	ESO UR20 DIN A4 WS	10	1429430000
PLC interface element	RS 16IO 1W H S	1	9445700000
Pre-assembled cable, 1m	PAC-UNIV-HE20-LCH-1M	1	7789306010
Replacement parts			
Electronic module	UR20-EM-1315450000-SP	1	1346990000
Basic module	UR20-BM-SP	5	1350930000
Plug-in connector unit	UR20-PK-1315450000-SP	5	2000540000
Note	1 roll = 1000 label = 1 Qty. 1 sheet = 60 label = 1 Qty.		

4DO-ISO-4A

- 4 digital outputs
- Insulation up to 500 V
- Can be loaded up to 4 A per channel
- Short-circuit-proof
- 2-wire connection
- IEC 61131-2 compliant

UR20-4DO-ISO-4A

Technical data

System data	
Interface	u-remote system bus
Transmission speed of system bus, max.	48 Mbit
Galvanic isolation	500 V DC between the current paths
Supply	
Voltage supply	24 V DC +20 %/ -15 %, via the system bus
Current consumption I_{IN} (power segment of the field bus coupler), typ.	8 mA
Current consumption from I_{OUT} (the respective power segment)	30 mA
Digital outputs	
Number of digital outputs	4
Type	Lamp load, Ohmic, Inductive
Max. response time, high	250 µs
Max. response time, low	250 µs
Output current per channel, max.	4 A DC / 2 A AC
Output current per module, max.	16 A DC / 8 A AC
Switching frequenz max. Resistive load (min. 47 Ω)	1 kHz
Switching frequenz max. Inductive load (DC13)	2 Hz
Switching frequenz max. Lamp load (12 W)	10 Hz
Actuator connection	2-wire
Short-circuit-proof	Yes
Feedback-free	Yes
Module diagnosis	Yes
Individual channel diagnosis	No
Switch-off energy (inductive)	< 150 mJ / channel
Response time of the protective circuit (current limiting)	< 100µs
General data	
Weight	91 g
Dimensions H x W x D	120 mm / 11.5 mm / 76 mm
Note	

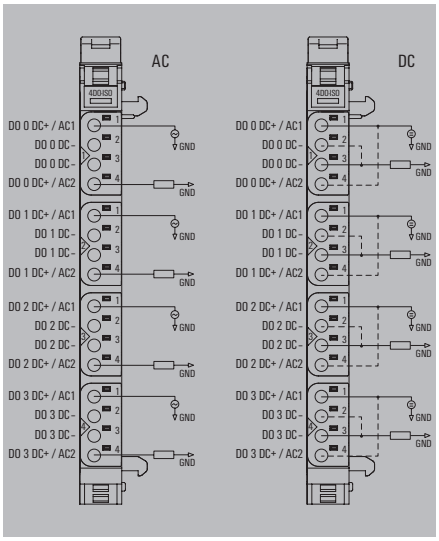

Product standard	IEC 61131-2
EMC	EN 61000
ATEX	EN 60079
UL	
MSIP	MSIP-REM-WMG-2457250000

Ordering data

Module variants	Type	Qty.	Order No.
	UR20-4DO-ISO-4A	1	**2457250000**
Note			

Accessories

	Type	Qty.	Order No.
Termination kit	UR20-EBK-ACC	5	**1346610000**
Swievel marker	UR20-SM-ACC	20	**1339920000**
Connection marker for pusher neutral	PM 2.7/2.6 MC NE WS	960	**1323710000**
Connection marker for pusher custom printing	PM 2.7/2.6 MC SDR	192	**1323700000**
Module marker for custom printing	DEK 5/8-11.5 MC SDR	100	**1341610000**
Module marker for neutral	DEK 5/8-11.5 MC NE WS	500	**1341630000**
Replacement parts			
Electronic module	UR20-EM-2457250000-SP	1	**2545790000**
Basic module	UR20-BM-SP	5	**1350930000**
Plug-in connector unit	UR20-PK-2457250000-SP	5	**2545770000**
Note			

4RO-SSR-255

- 4 digital outputs
- Can be loaded up to 1 A per channel
- Solid state relay

UR20-4RO-SSR-255

Technical data

System data	
Interface	u-remote system bus
Transmission speed of system bus, max.	48 Mbit
Galvanic isolation	500 V DC between the current paths
Supply	
Voltage supply	24 V DC +20 %/ -15 %, via the system bus
Current consumption I_{IN} (power segment of the field bus coupler), typ.	8 mA
Current consumption from I_{OUT} (the respective power segment)	< 15 mA
Digital outputs	
Number	4
Type	SSR / Triac
Max. response time, high	10 ms
Max. response time, low	10 ms
Output current per channel, max.	1 A
Output current per module, max.	4 A
Max. switching frequency	40 Hz
Short-circuit-proof	No
Feedback-free	Yes
Switching voltage, max.	255 V AC,UL: 277 V AC
Module diagnosis	Yes
Individual channel diagnosis	No
General data	
Weight	85 g
Dimensions H x W x D	120 mm / 11.5 mm / 76 mm
Note	

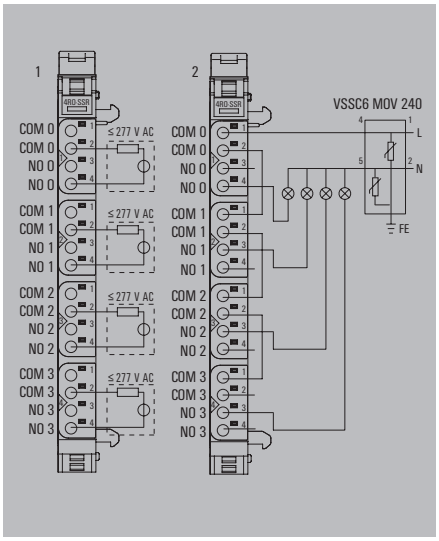

Product standard	IEC 61131-2
EMC	EN 61000
ATEX	EN 60079
UL	UL 61010-2-201
MSIP	MSIP-REM-WMG-1315540000

ABS (American Bureau of Shipping)
BSH (Federal Maritime and Hydrographic Agency of Germany)
BV (Bureau Veritas)
DNV GL (Det Norske Veritas) (Germanischer Lloyd)
LR (Lloyd's Register)
RINA (Registro Italiano Navale)

Ordering data

Module variants	Type	Qty.	Order No.
Digital output module, 4 channels, SSR	UR20-4RO-SSR-255	1	**1315540000**
Note			

Accessories

	Type	Qty.	Order No.
Coding elements	KOSM BHZ5.00	100	**1483050000**
Termination kit	UR20-EBK-ACC	5	**1346610000**
Swivel marker	UR20-SM-ACC	20	**1339920000**
Connection marker for pusher custom printing	PM 2.7/2.6 MC SDR	192	**1323700000**
Connection marker for pusher neutral	PM 2.7/2.6 MC NE WS	960	**1323710000**
Module marker for custom printing	DEK 5/8-11.5 MC SDR	100	**1341610000**
Module marker for neutral	DEK 5/8-11.5 MC NE WS	500	**1341630000**
Thermotransfer version (Material: Polyester)	THM UR20 GE	1	**1429910000**
Thermotransfer version (material: polyester)	THM UR20 WS	1	**1429420000**
Paper version for Laserprinter	ESO UR20 DIN A4 WS	10	**1429430000**
Replacement parts			
Electronic module	UR20-EM-1315540000-SP	1	**1347120000**
Basic module	UR20-BM-SP	5	**1350930000**
Plug-in connector unit	UR20-PK-1315540000-SP	5	**1484000000**
Note	1 roll = 1000 label = 1 Qty. 1 sheet = 60 label = 1 Qty.		

4RO-CO-255

- 4 digital outputs
- Can be loaded up to 6 A per channel
- Relay output, change-over contact
- Switching voltage 277 V AC/DC

UR20-4RO-CO-255

Technical data

System data	
Interface	u-remote system bus
Transmission speed of system bus, max.	48 Mbit
Galvanic isolation	500 V DC between the current paths
Supply	
Voltage supply	24 V DC +20 %/ -15 %, via the system bus
Current consumption I_{IN} (power segment of the field bus coupler), typ.	8 mA
Current consumption from I_{OUT} (the respective power segment)	< 15 mA
Digital outputs	
Number	4
Type	CO contact
Max. response time, high	20 ms
Max. response time, low	20 ms
Output current per channel, max.	5 A
Output current per module, max.	20 A
Max. switching frequency	5 Hz
Short-circuit-proof	No
Feedback-free	Yes
Switching voltage, max.	277 V AC/DC
Module diagnosis	Yes
Individual channel diagnosis	No
General data	
Weight	119 g
Dimensions H x W x D	120 mm / 11.5 mm / 76 mm
Note	

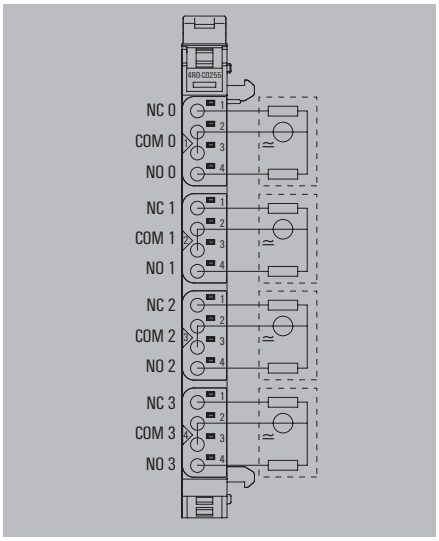

Product standard	IEC 61131-2
EMC	EN 61000
ATEX	EN 60079
UL	UL 61010-2-201
MSIP	MSIP-REM-WMG-1315550000

ABS (American Bureau of Shipping)
BSH (Federal Maritime and Hydrographic Agency of Germany)
BV (Bureau Veritas)
DNV GL (Det Norske Veritas) (Germanischer Lloyd)
LR (Lloyd's Register)
RINA (Registro Italiano Navale)

Ordering data

Module variants	Type	Qty.	Order No.
Digital output module, 4 channels, relay	UR20-4RO-CO-255	1	1315550000
Note			

Accessories

	Type	Qty.	Order No.
Coding elements	KOSM BHZ5.00	100	1483050000
Termination kit	UR20-EBK-ACC	5	1346610000
Swivel marker	UR20-SM-ACC	20	1339920000
Connection marker for pusher custom printing	PM 2.7/2.6 MC SDR	192	1323700000
Connection marker for pusher neutral	PM 2.7/2.6 MC NE WS	960	1323710000
Module marker for custom printing	DEK 5/8-11.5 MC SDR	100	1341610000
Module marker for neutral	DEK 5/8-11.5 MC NE WS	500	1341630000
Thermotransfer version (Material: Polyester)	THM UR20 GE	1	1429910000
Thermotransfer version (material: polyester)	THM UR20 WS	1	1429420000
Paper version for Laserprinter	ESO UR20 DIN A4 WS	10	1429430000
Replacement parts			
Electronic module	UR20-EM-1315550000-SP	1	1347130000
Basic module	UR20-BM-SP	5	1350930000
Plug-in connector unit	UR20-PK-1315550000-SP	5	1346500000
Note	1 roll = 1000 label = 1 Qty. 1 sheet = 60 label = 1 Qty.		

Digital input and output modules
8 universally switchable digital inputs/outputs

The automation of machines and plants is usually planned in great detail. The aim is to ensure smooth commissioning and error-free operation. If unexpected changes nevertheless occur, a flexible automation infrastructure is a great advantage.

u-remote UR20-8DIO-P-3W-DIAG is a universally applicable digital I/O module in which each individual channel can be parameterised independently as an input or output. Sensors and actuators can be connected to the same module, which reduces the number of modules per I/O station.

In addition, subsequent changes to the system can be made by reconfiguring the system. Adjustable individual channel diagnoses for inputs and outputs increase the transparency of the device or system status.

UR20-8DIO-P-3W-DIAG

8DIO-P-3W-DIAG

- 8 digital inputs and 8 digital outputs
- Overcurrent monitoring and electronic protection
- Overload monitoring
- Line break detection
- 2-wire, 3-wire connection

UR20-8DIO-P-3W-DIAG

Technical data

System data	
Interface	u-remote system bus
Transmission speed of system bus, max.	48 Mbit
Galvanic isolation	500 V DC between the current paths
Supply	
Voltage supply	24 V DC +20 %/ -15 %, via the system bus
Current consumption I_{IN} (power segment of the field bus coupler), typ.	8 mA
Current consumption from I_{OUT} (the respective power segment)	32 mA + I-Last
Digital inputs	
Number of digital inputs	8
Input type	P-switching, for Type 1 and Type 3 sensors as per IEC 61131-2
Input filter	Input delay adjustable from 0 to 40 ms
Input voltage, low	< + 5 V referred to 0 V of the output power supply U_{OUT}
Input voltage, high	> + 11 V referred to 0 V of the output power supply U_{OUT}
Sensor supply	≥ 0.3 A per connector, limited electronically
Sensor connection	2-wire, 3-wire
Reverse polarity protection	No, Input voltage below -10 V can destroy the module
Module diagnosis	Yes
Individual channel diagnosis	only auxiliary voltage output
Digital outputs	
Number of digital outputs	8
Type	PNP switched
Output current per channel, max.	0.5 A
Output current per module, max.	4 A
Switching frequenz max. Resistive load (min. 47 Ω)	1 kHz
Switching frequenz max. Inductive load (DC13)	0.2 Hz
Switching frequenz max. Lamp load (12 W)	10 Hz
Actuator connection	2-wire, 3-wire
Short-circuit-proof	Yes
Feedback-free	Yes
Module diagnosis	Yes
Individual channel diagnosis	Yes, Overcurrent monitoring > 0.5 A, line break detection
Switch-off energy (inductive)	< 150 mJ / channel
Response time of the protective circuit (current limiting)	< 100µs
General data	
Weight	83 g
Dimensions H x W x D	120 mm / 11.5 mm / 76 mm
Note	

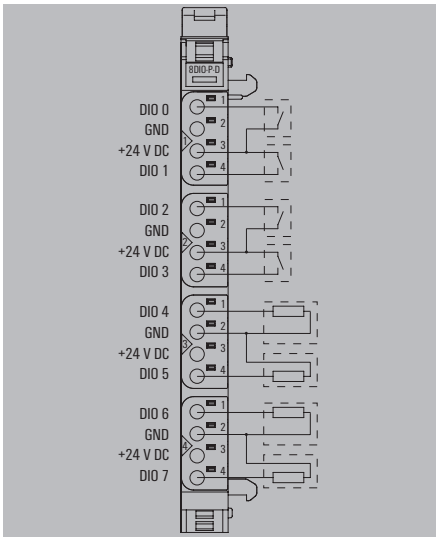

Product standard	IEC 61131-2
EMC	EN 61000
ATEX	EN 60079
UL	UL 61010-2-201
MSIP	MSIP-REM-WMG-2456530000

Ordering data

Module variants	Type	Qty.	Order No.
Digital input and output module, 8 channels	UR20-8DIO-P-3W-DIAG	1	**2456530000**
Note			

Accessories

	Type	Qty.	Order No.
Termination kit	UR20-EBK-ACC	5	**1346610000**
Swivel marker	UR20-SM-ACC	20	**1339920000**
Connection marker for pusher neutral	PM 2.7/2.6 MC NE WS	960	**1323710000**
Connection marker for pusher custom printing	PM 2.7/2.6 MC SDR	192	**1323700000**
Module marker for custom printing	DEK 5/8-11.5 MC SDR	100	**1341610000**
Module marker for neutral	DEK 5/8-11.5 MC NE WS	500	**1341630000**
Replacement parts			
Electronic module	UR20-EM-2456530000-SP	1	**2593330000**
Basic module	UR20-BM-SP	5	**1350930000**
Plug-in connector unit	UR20-PK-2456530000-SP	5	**2593320000**
Note			

Pulse width modulation and stepper motor modules

As part of the u-remote system, Weidmüller offers a specialised solution for controlling small motors with a current requirement of 0.5 A to 2 A, which can also be used to control valve flaps. The pulse width modulation modules can be adjusted within the switching frequencies up to 40 kHz and the modules can also be switched in the motor control with the aid of push/pull output stages, e.g. to change the direction of rotation.

Weidmüller's stepper motor module is efficient and flexible for use in the automation of robots, handling systems or placement machines with stepper motors. Variably adjustable operating parameters as well as a wide range supply from 12 V DC to 50 V DC make the module flexibly applicable for various target applications. Six integrated, parameterizable encoder or digital inputs and two digital outputs with 0.5 A make the control module a complete solution in the smallest of spaces.

As with all modules of the u-remote system, the features are convincing - from the modular design and exchangeable electronics to the removable and pluggable terminal strip. The module electronics supplies the connected actuators from the output current path (U_{OUT}).

UR20-2PWM-PN-0.5A

UR20-2PWM-PN-2A

UR20-1SM-50W-6DI2DO-P

2PWM-PN-0.5A

- 2 pulse width modulation module outputs
- Can be loaded up to 0.5 A per channel
- Short-circuit-proof
- Push/pull output
- Maximum 40 kHz output frequency (adjustable)

UR20-2PWM-PN-0.5A

Technical data

System data	
Interface	u-remote system bus
Transmission speed of system bus, max.	48 Mbit
Galvanic isolation	500 V DC between the current paths
Supply	
Voltage supply	24 V DC +20 %/ -15 %, via the system bus
Current consumption I_{IN} (power segment of the field bus coupler), typ.	8 mA
Current consumption from I_{OUT} (the respective power segment)	40 mA
Digital outputs	
Number of digital outputs	2
Type	DO PWM push / pull
Resolution	32 Bit
Accuracy	1 Bit
Max. response time, high	100 ns
Max. response time, low	100 ns
Output current per channel, max.	500 mA
Output current per module, max.	1000 mA
Switching frequency, resistive load	Static, 6 Hz ... 40 kHz
Switching frequency, inductive load	Static, 6 Hz ... 40 kHz
Switching frequency, lamp load	Static, 6 Hz ... 40 kHz
Actuator connection	2-wire, 3-wire, 3-wire + FE
Short-circuit-proof	Yes
Module diagnosis	Yes
Individual channel diagnosis	No
Feedback-free	Yes
Pulse duty factor	0--100% push/pull or push, parameterisable
General data	
Weight	85 g
Dimensions H x W x D	120 mm / 11.5 mm / 76 mm
Note	

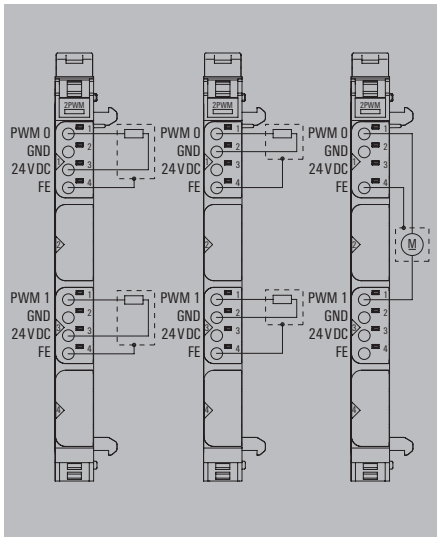

Product standard	IEC 61131-2
EMC	EN 61000
ATEX	EN 60079
UL	UL 61010-2-201
MSIP	MSIP-REM-WMG-1315600000

Ordering data

Module variants	Type	Qty.	Order No.
Digital output module, PWM, 2 channels, 0.5 A	UR20-2PWM-PN-0.5A	1	1315600000
Note			

Accessories

	Type	Qty.	Order No.
Coding elements	KOSM BHZ5.00	100	1483050000
Termination kit	UR20-EBK-ACC	5	1346610000
Swivel marker	UR20-SM-ACC	20	1339920000
Connection marker for pusher custom printing	PM 2.7/2.6 MC SDR	192	1323700000
Connection marker for pusher neutral	PM 2.7/2.6 MC NE WS	960	1323710000
Module marker for custom printing	DEK 5/8-11.5 MC SDR	100	1341610000
Module marker for neutral	DEK 5/8-11.5 MC NE WS	500	1341630000
Thermotransfer version (Material: Polyester)	THM UR20 GE	1	1429910000
Thermotransfer version (material: polyester)	THM UR20 WS	1	1429420000
Paper version for Laserprinter	ESO UR20 DIN A4 WS	10	1429430000
Replacement parts			
Electronic module	UR20-EM-1315600000-SP	1	1347180000
Basic module	UR20-BM-SP	5	1350930000
Plug-in connector unit	UR20-PK-1315600000-SP	5	1484010000
Note	1 roll = 1000 label = 1 Qty. 1 sheet = 60 label = 1 Qty.		

2PWM-PN-2A

- 2 pulse width modulation module outputs
- Can be loaded up to 2 A per channel
- Short-circuit-proof
- Push/pull output
- Maximum 40 kHz output frequency (adjustable)

UR20-2PWM-PN-2A

Technical data

System data	
Interface	u-remote system bus
Transmission speed of system bus, max.	48 Mbit
Galvanic isolation	500 V DC between the current paths
Supply	
Voltage supply	24 V DC +20 %/ -15 %, via the system bus
Current consumption I_{IN} (power segment of the field bus coupler), typ.	8 mA
Current consumption from I_{OUT} (the respective power segment)	40 mA
Digital outputs	
Number of digital outputs	2
Type	DO PWM push / pull
Resolution	32 Bit
Accuracy	1 Bit
Max. response time, high	100 ns
Max. response time, low	100 ns
Output current per channel, max.	2000 mA
Output current per module, max.	4000 mA
Switching frequency, resistive load	Static, 6 Hz ... 40 kHz
Switching frequency, inductive load	Static, 6 Hz ... 40 kHz
Switching frequency, lamp load	Static, 6 Hz ... 40 kHz
Actuator connection	2-wire, 3-wire, 3-wire + FE
Short-circuit-proof	Yes
Module diagnosis	Yes
Individual channel diagnosis	No
Feedback-free	Yes
Pulse duty factor	0--100% push/pull or push, parameterisable
General data	
Weight	83 g
Dimensions H x W x D	120 mm / 11.5 mm / 76 mm
Note	

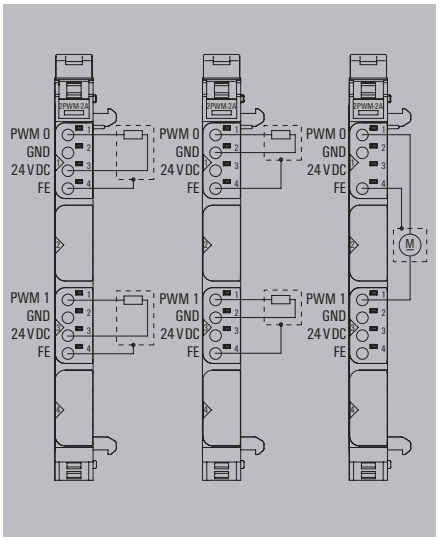

Product standard	IEC 61131-2
EMC	EN 61000
ATEX	EN 60079
UL	UL 61010-2-201
MSIP	MSIP-REM-WMG-1315610000

Ordering data

Module variants	Type	Qty.	Order No.
Digital output module, PWM, 2 channels, 2 A	UR20-2PWM-PN-2A	1	1315610000
Note			

Accessories

	Type	Qty.	Order No.
Coding elements	KOSM BHZ5.00	100	1483050000
Termination kit	UR20-EBK-ACC	5	1346610000
Swivel marker	UR20-SM-ACC	20	1339920000
Connection marker for pusher custom printing	PM 2.7/2.6 MC SDR	192	1323700000
Connection marker for pusher neutral	PM 2.7/2.6 MC NE WS	960	1323710000
Module marker for custom printing	DEK 5/8-11.5 MC SDR	100	1341610000
Module marker for neutral	DEK 5/8-11.5 MC NE WS	500	1341630000
Thermotransfer version (Material: Polyester)	THM UR20 GE	1	1429910000
Thermotransfer version (material: polyester)	THM UR20 WS	1	1429420000
Paper version for Laserprinter	ESO UR20 DIN A4 WS	10	1429430000
Replacement parts			
Electronic module	UR20-EM-1315610000-SP	1	1347190000
Basic module	UR20-BM-SP	5	1350930000
Plug-in connector unit	UR20-PK-1315610000-SP	5	1346550000
Note	1 roll = 1000 label = 1 Qty. 1 sheet = 60 label = 1 Qty.		

1SM-50W-6DI2DO-P

- Power output stage for drive power uo to 50 W
- Supply voltage range from 12 to 50 V DC
- 6 configurable encoder/digital inputs
- 2 digital outputs (0.5 A)
- Up to 256 micro-steps
- Relative and absolute positioning

UR20-1SM-50W-6DI2DO-P

Technical data

System data	
Interface	u-remote system bus
Transmission speed of system bus, max.	48 Mbit/s
Galvanic isolation	DC 500 V between current paths
Supply	
Voltage supply	24 V DC +20 %/ -15 %
Current consumption I_{IN} (power segment of the field bus coupler), typ.	8 mA
Current consumption from I_{OUT} (the respective power segment)	10 mA + load
Current consumption from external power supply	35 mA + load
Stepper motor connections	
Number of channels	1
Power output stage, max.	50 W
Short-circuit-proof	Yes
Connection type	4-wire
Digital inputs DI 0...DI 3	
Number of channels	4
Input type	P-switching, for Type 1 and Type 3 sensors as per IEC 61131-2
Current supply, sensor	max. 1 A per plug
Sensor connection	2-wire, 3-wire
Reverse polarity protection	Yes
Digital inputs DI 4...DI 5	
Number of channels	2
Input type	Input characteristics for sensor types 1 and 3 are according to EN 61131-2, P-switching
Suitable for incremental encoder	Yes
Input frequency, max.	100kHz
Mode of operation	AB mode with 4-times sampling
Current supply, sensor	max. 1 A per plug
Sensor connection	2-wire, 3-wire
Reverse polarity protection	Yes
Digital outputs DO 0...DO 1	
Number of channels	2
Response time low-high, max. / Response time high-low, max.	100µs / 250µs
Output current per channel, max.	0.5A
Actuator connection	2-wire
Short-circuit-proof / Reactionless	Yes / Yes
General data	
Weight / Dimensions H x W x D	173 g / 120 / 23 / 76 mm
Note	

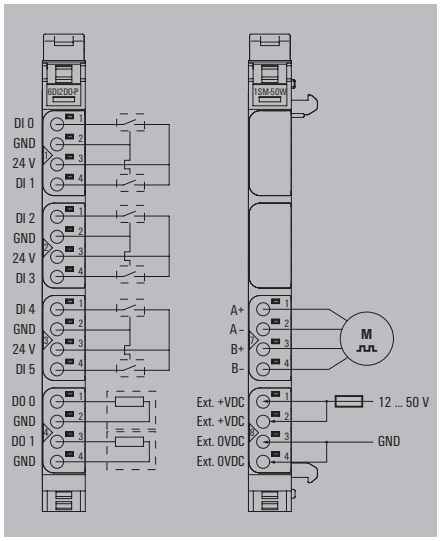

Product standard	IEC 61131-2
EMC	EN 61000
ATEX	EN 60079
UL	UL 61010-2-201
MSIP	

Ordering data

Module variants	Type	Qty.	Order No.
Stepper motor module, 6 digital inputs, 2 digital outputs	UR20-1SM-50W-6DI2DO-P	1	**2489830000**
Note			

Accessories

	Type	Qty.	Order No.
Termination kit	UR20-EBK-ACC	5	**1346610000**
Swievel marker	UR20-SM-ACC	20	**1339920000**
Connection marker for pusher neutral	PM 2.7/2.6 MC NE WS	960	**1323710000**
Connection marker for pusher custom printing	PM 2.7/2.6 MC SDR	192	**1323700000**
Module marker for custom printing	DEK 5/8-11.5 MC SDR	100	**1341610000**
Module marker for neutral	DEK 5/8-11.5 MC NE WS	500	**1341630000**
Replacement parts			
Electronic module	UR20-EM-2489830000-SP	1	**2585660000**
Basic module	UR20-BM-SP	5	**1350930000**
Plug-in connector unit	UR20-PK1-2489830000-SP	5	**2573750000**
Plug-in connector unit	UR20-PK2-2489830000-SP	5	**2585650000**
Note			

Analogue input modules

Input parameters can be set for current or voltage; up to 3-wire+FE; Accuracy 0.1% FSR

Analogue input modules of the u-remote system are available in many variants with different resolutions and wiring solutions.
Variants are available in a 12- and 16-bit resolution, which record up to 8 analogue sensors with +/-10 V, +/-5 V, 0...10 V, 0...5 V, 2...10 V, 1...5 V, 0...20 mA or 4...20 mA with maximum accuracy. Each plug-in connector has options for connecting sensors with 2-wire, 3-wire and 3-wire+FE technology. The parameters for the measurement range can be individually set for each channel. A separate status LED is also assigned to each channel. A special variant for Weidmüller interface units enables current measurements with a 16-bit resolution at maximum accuracy for 8 sensors at a time (0...20 mA or 4...20 mA).

The module electronics supply the connected sensors from the input current path (U_{IN}).

UR20-4AI-UI-16

UR20-4AI-UI-16-DIAG

UR20-4AI-UI-DIF-16-DIAG

UR20-4AI-UI-DIF-32-DIAG

UR20-4AI-UI-16-HD

UR20-4AI-UI-16-DIAG-HD

UR20-4AI-UI-12

UR20-8AI-I-16-HD

UR20-8AI-I-16-DIAG-HD

UR20-8AI-I-PLC-INT

4AI-UI-12

- 4 analogue inputs
- Parameterisable inputs (voltage, current)
- 12-bit resolution
- 2-wire, 3-wire and 3-wire+FE connection
- Accuracy 0.25 % FSR

UR20-4AI-UI-12

Technical data

System data	
Interface	u-remote system bus
Transmission speed of system bus, max.	48 Mbit
Galvanic isolation	DC 500 V between current paths
Supply	
Voltage supply	24 V DC +20 %/ -15 %, via the system bus
Current consumption I_{IN} (power segment of the field bus coupler), typ.	8 mA
Current consumption I_{IN} (the respective power segment)	25 mA + sensor feed
Analogue inputs	
Number of analogue inputs	4
Type	1. U (0...5 V, 0...10 V, 1...5 V, 2...10 V, ±10 V), 2. I (0–20 mA or 4–20 mA), Adjustable input for current or voltage
Resolution	12-bit
Accuracy	0.1% FSR
Sensor supply	Yes
Sensor connection	2-wire, 3-wire, 3-wire + FE
Conversion time	1 ms
Internal resistance U	100 kΩ
Internal resistance I	41.2 Ω
Reverse polarity protection	Yes
Module diagnosis	Yes
Individual channel diagnosis	No
Short-circuit-proof	Yes
General data	
Weight	87 g
Dimensions H x W x D	120 mm / 11.5 mm / 76 mm
Note	

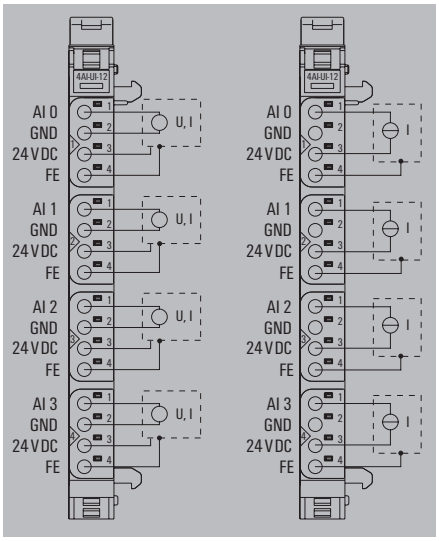

Product standard	IEC 61131-2
EMC	EN 61000
ATEX	EN 60079
UL	UL 61010-2-201
MSIP	MSIP-REM-WMG-1394390000
ABS (American Bureau of Shipping)	
BSH (Federal Maritime and Hydrographic Agency of Germany)	
BV (Bureau Veritas)	
DNV GL (Det Norske Veritas) (Germanischer Lloyd)	
LR (Lloyd's Register)	
RINA (Registro Italiano Navale)	

Ordering data

Module variants	Type	Qty.	Order No.
Analogue input module, 4 channels, 12 bits	UR20-4AI-UI-12	1	1394390000
Note			

Accessories

	Type	Qty.	Order No.
Coding elements	KOSM BHZ5.00	100	1483050000
Termination kit	UR20-EBK-ACC	5	1346610000
Swievel marker	UR20-SM-ACC	20	1339920000
Connection marker for pusher custom printing	PM 2.7/2.6 MC SDR	192	1323700000
Connection marker for pusher neutral	PM 2.7/2.6 MC NE WS	960	1323710000
Module marker for custom printing	DEK 5/8-11.5 MC SDR	100	1341610000
Module marker for neutral	DEK 5/8-11.5 MC NE WS	500	1341630000
Thermotransfer version (Material: Polyester)	THM UR20 GE	1	1429910000
Thermotransfer version (material: polyester)	THM UR20 WS	1	1429420000
Paper version for Laserprinter	ESO UR20 DIN A4 WS	10	1429430000
Replacement parts			
Electronic module	UR20-EM-1394390000-SP	1	1434230000
Basic module	UR20-BM-SP	5	1350930000
Plug-in connector unit	UR20-PK-1394390000-SP	5	1484030000
Note	1 roll = 1000 label = 1 Qty. 1 sheet = 60 label = 1 Qty.		

4AI-UI-16

- 4 analogue inputs
- Parameterisable inputs (voltage, current)
- 16-bit resolution
- 2-wire, 3-wire and 3-wire+FE connection
- Accuracy 0.1 % FSR

UR20-4AI-UI-16

Technical data

System data	
Interface	u-remote system bus
Transmission speed of system bus, max.	48 Mbit
Galvanic isolation	DC 500 V between current paths
Supply	
Voltage supply	24 V DC +20 %/ -15 %, via the system bus
Current consumption I_{IN} (power segment of the field bus coupler), typ.	8 mA
Current consumption I_{IN} (the respective power segment)	25 mA + sensor feed
Analogue inputs	
Number of analogue inputs	4
Type	1. U (0...5 V, 0...10 V, 1...5 V, 2...10 V, ±10 V), 2. I (0–20 mA or 4–20 mA), Adjustable input for current or voltage
Resolution	16 Bit
Accuracy	0.1% FSR
Sensor supply	Yes
Sensor connection	2-wire, 3-wire, 3-wire + FE
Conversion time	1 ms
Internal resistance U	100 kΩ
Internal resistance I	41.2 Ω
Reverse polarity protection	Yes
Module diagnosis	Yes
Individual channel diagnosis	No
Short-circuit-proof	Yes
General data	
Weight	89 g
Dimensions H x W x D	120 mm / 11.5 mm / 76 mm
Note	

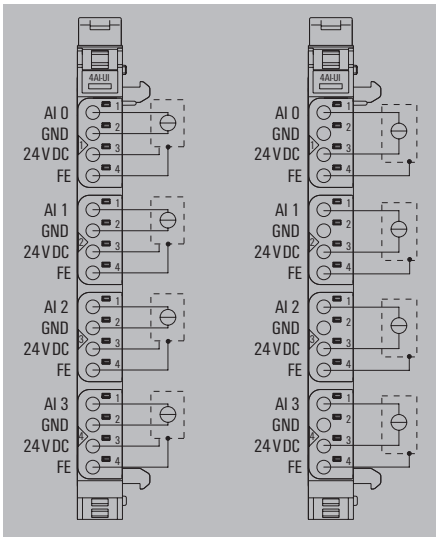

Product standard	IEC 61131-2
EMC	EN 61000
ATEX	EN 60079
UL	UL 61010-2-201
MSIP	MSIP-REM-WMG-1315620000

ABS (American Bureau of Shipping)
BSH (Federal Maritime and Hydrographic Agency of Germany)
BV (Bureau Veritas)
DNV GL (Det Norske Veritas) (Germanischer Lloyd)
LR (Lloyd's Register)
RINA (Registro Italiano Navale)

Ordering data

Module variants	Type	Qty.	Order No.
Analogue input module, 4 channels, 16 bits	UR20-4AI-UI-16	1	1315620000
Note			

Accessories

	Type	Qty.	Order No.
Coding elements	KOSM BHZ5.00	100	1483050000
Termination kit	UR20-EBK-ACC	5	1346610000
Swievel marker	UR20-SM-ACC	20	1339920000
Connection marker for pusher custom printing	PM 2.7/2.6 MC SDR	192	1323700000
Connection marker for pusher neutral	PM 2.7/2.6 MC NE WS	960	1323710000
Module marker for custom printing	DEK 5/8-11.5 MC SDR	100	1341610000
Module marker for neutral	DEK 5/8-11.5 MC NE WS	500	1341630000
Thermotransfer version (Material: Polyester)	THM UR20 GE	1	1429910000
Thermotransfer version (material: polyester)	THM UR20 WS	1	1429420000
Paper version for Laserprinter	ESO UR20 DIN A4 WS	10	1429430000
Replacement parts			
Electronic module	UR20-EM-1315620000-SP	1	1347200000
Basic module	UR20-BM-SP	5	1350930000
Plug-in connector unit	UR20-PK-1315620000-SP	5	1484020000
Note	1 roll = 1000 label = 1 Qty. 1 sheet = 60 label = 1 Qty.		

4AI-UI-16-DIAG

- Advanced diagnosis functions
- 4 analogue inputs
- Parameterisable inputs (voltage, current)
- 16-bit resolution
- 2-wire, 3-wire and 3-wire+FE connection
- Accuracy 0.1 % FSR

UR20-4AI-UI-16-DIAG

Technical data

System data	
Interface	u-remote system bus
Transmission speed of system bus, max.	48 Mbit
Galvanic isolation	500 V DC between the current paths
Supply	
Voltage supply	24 V DC +20 %/ -15 %, via the system bus
Current consumption I_{IN} (power segment of the field bus coupler), typ.	8 mA
Current consumption I_{IN} (the respective power segment)	25 mA + sensor feed
Analogue inputs	
Number of analogue inputs	4
Type	1. U (0...5 V, 0...10 V, 1...5 V, 2...10 V, ±10 V), 2. I (0–20 mA or 4–20 mA)
Resolution	16 Bit
Accuracy	0.1% FSR
Sensor supply	Yes
Sensor connection	2-wire, 3-wire, 3-wire + FE
Conversion time	1 ms
Internal resistance U	100 kΩ
Internal resistance I	41.2 Ω
Reverse polarity protection	Yes
Module diagnosis	Yes
Individual channel diagnosis	Yes
Short-circuit-proof	Yes
General data	
Weight	89 g
Dimensions H x W x D	120 mm / 11.5 mm / 76 mm
Note	

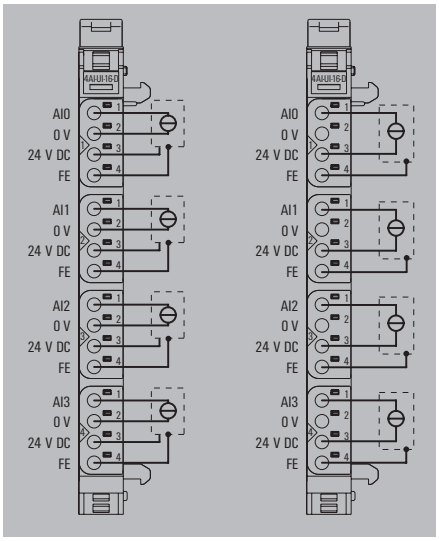

Product standard	IEC 61131-2
EMC	EN 61000
ATEX	EN 60079
UL	UL 61010-2-201
MSIP	MSIP-REM-WMG-1315690000

Ordering data

Module variants	Type	Qty.	Order No.
Analogue input module, 4 channels, 16 bits, diagnosis functions	UR20-4AI-UI-16-DIAG	1	1315690000
Note			

Accessories

	Type	Qty.	Order No.
Coding elements	KOSM BHZ5.00	100	1483050000
Termination kit	UR20-EBK-ACC	5	1346610000
Swievel marker	UR20-SM-ACC	20	1339920000
Connection marker for pusher custom printing	PM 2.7/2.6 MC SDR	192	1323700000
Connection marker for pusher neutral	PM 2.7/2.6 MC NE WS	960	1323710000
Module marker for custom printing	DEK 5/8-11.5 MC SDR	100	1341610000
Module marker for neutral	DEK 5/8-11.5 MC NE WS	500	1341630000
Thermotransfer version (Material: Polyester)	THM UR20 GE	1	1429910000
Thermotransfer version (material: polyester)	THM UR20 WS	1	1429420000
Paper version for Laserprinter	ESO UR20 DIN A4 WS	10	1429430000
Replacement parts			
Electronic module	UR20-EM-1315690000-SP	1	1347280000
Basic module	UR20-BM-SP	5	1350930000
Plug-in connector unit	UR20-PK-1315690000-SP	5	1518870000
Note	1 roll = 1000 label = 1 Qty. 1 sheet = 60 label = 1 Qty.		

4AI-UI-16-HD

- 4 analogue inputs
- Parameterisable inputs (voltage, current)
- 16-bit resolution
- 2-wire, 3-wire and 3-wire+FE connection
- Accuracy 0.1 % FSR

UR20-4AI-UI-16-HD

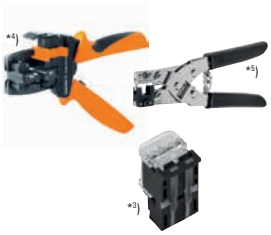

Note: Please order connector separately

Technical data

System data	
Interface	u-remote system bus
Transmission speed of system bus, max.	48 Mbit
Galvanic isolation	DC 500 V between current paths
Supply	
Voltage supply	24 V DC +20 %/ -15 %, via the system bus
Current consumption I_{IN} (power segment of the field bus coupler), typ.	8 mA
Current consumption I_{IN} (the respective power segment)	25 mA + sensor feed
Analogue inputs	
Number of analogue inputs	4
Type	1. U (0...5 V, 0...10 V, 1...5 V, 2...10 V, ±10 V), 2. I (0–20 mA or 4–20 mA)
Resolution	16 Bit
Accuracy	0.1% FSR
Sensor supply	Yes
Sensor connection	2-wire, 3-wire, 3-wire + FE
Conversion time	1 ms
Internal resistance U	100 kΩ
Internal resistance I	45 Ω
Reverse polarity protection	Yes
Module diagnosis	Yes
Individual channel diagnosis	No
Short-circuit-proof	Yes
General data	
Weight	72 g
Dimensions H x W x D	120 mm / 11.5 mm / 76 mm
Note	

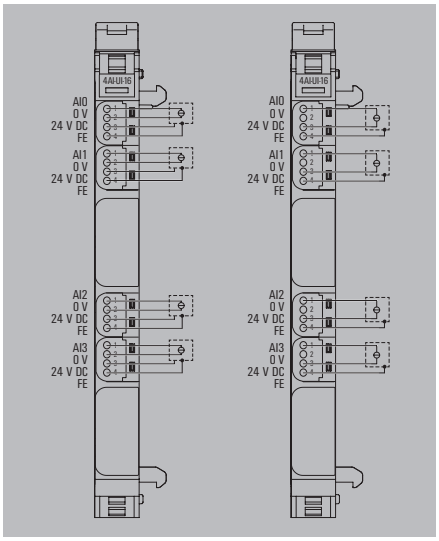

Product standard	IEC 61131-2
EMC	EN 61000
ATEX	EN 60079
UL	UL 61010-2-201
MSIP	MSIP-REM-WMG-1506920000

Ordering data

Module variants	Type	Qty.	Order No.
Analogue input module, 4 channels, 16 bits, HD plug	UR20-4AI-UI-16-HD	1	**1506920000**
Note			

Accessories

	Type	Qty.	Order No.
Coding elements	KOSM BHZ5.00	100	**1483050000**
Termination kit	UR20-EBK-ACC	5	**1346610000**
Swievel marker	UR20-SM-ACC	20	**1339920000**
*3) HD plug	UR20-PG0.35	8	**1469340000**
*4) Stripping tool	MULTI-STRIPAX 6-16	1	**9202210000**
*5) Pressing tool	PWZ-UR20-HD	1	**1525820000**
Module marker for custom printing	DEK 5/8-11.5 MC SDR	100	**1341610000**
Module marker for neutral	DEK 5/8-11.5 MC NE WS	500	**1341630000**
Thermotransfer version (Material: Polyester)	THM UR20 GE	1	**1429910000**
Thermotransfer version (material: polyester)	THM UR20 WS	1	**1429420000**
Paper version for Laserprinter	ESO UR20 DIN A4 WS	10	**1429430000**
Replacement parts			
Electronic module	UR20-EM-1506920000-SP	1	**1515420000**
Basic module	UR20-BM-SP	5	**1350930000**
Plug-in connector unit	UR20-PK-1506920000-SP	5	**1518830000**
Note	Note: please order plug (1469340000) separately.		

4AI-UI-16-DIAG-HD

- Advanced diagnosis functions
- 4 analogue inputs
- Parameterisable inputs (voltage, current)
- 16-bit resolution
- 2-wire, 3-wire and 3-wire+FE connection
- Accuracy 0.1 % FSR

UR20-4AI-UI-16-DIAG-HD

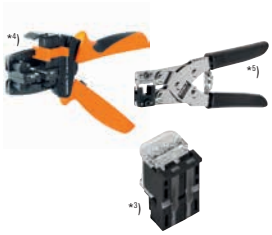

Note: Please order connector separately

Technical data

System data	
Interface	u-remote system bus
Transmission speed of system bus, max.	48 Mbit
Galvanic isolation	500 V DC between the current paths
Supply	
Voltage supply	24 V DC +20 %/ -15 %, via the system bus
Current consumption I_{IN} (power segment of the field bus coupler), typ.	8 mA
Current consumption I_{IN} (the respective power segment)	25 mA + sensor feed
Analogue inputs	
Number of analogue inputs	4
Type	1. U (0...5 V, 0...10 V, 1...5 V, 2...10 V, ±10 V), 2. I (0–20 mA or 4–20 mA)
Resolution	16 Bit
Accuracy	0.1% FSR
Sensor supply	Yes
Sensor connection	2-wire, 3-wire, 3-wire + FE
Conversion time	1 ms
Internal resistance U	100 kΩ
Internal resistance I	45 Ω
Reverse polarity protection	Yes
Module diagnosis	Yes
Individual channel diagnosis	Yes
Short-circuit-proof	Yes
General data	
Weight	72 g
Dimensions H x W x D	120 mm / 11.5 mm / 76 mm
Note	

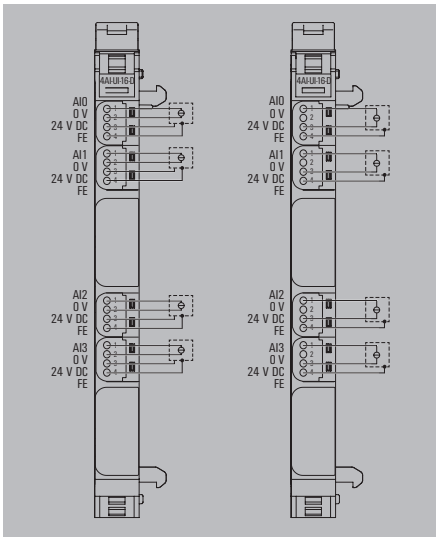

Product standard	IEC 61131-2
EMC	EN 61000
ATEX	EN 60079
UL	UL 61010-2-201
MSIP	MSIP-REM-WMG-1506910000

Ordering data

Module variants	Type	Qty.	Order No.
Analogue input module, 4 channels, diagnosis functions, HD-plug	UR20-4AI-UI-16-DIAG-HD	1	**1506910000**
Note			

Accessories

	Type	Qty.	Order No.
Coding elements	KOSM BHZ5.00	100	**1483050000**
Termination kit	UR20-EBK-ACC	5	**1346610000**
Swivel marker	UR20-SM-ACC	20	**1339920000**
*3) HD plug	UR20-PG0.35	8	**1469340000**
*4) Stripping tool	MULTI-STRIPAX 6-16	1	**9202210000**
*5) Pressing tool	PWZ-UR20-HD	1	**1525820000**
Module marker for custom printing	DEK 5/8-11.5 MC SDR	100	**1341610000**
Module marker for neutral	DEK 5/8-11.5 MC NE WS	500	**1341630000**
Thermotransfer version (Material: Polyester)	THM UR20 GE	1	**1429910000**
Thermotransfer version (material: polyester)	THM UR20 WS	1	**1429420000**
Paper version for Laserprinter	ESO UR20 DIN A4 WS	10	**1429430000**
Replacement parts			
Electronic module	UR20-EM-1506910000-SP	1	**1515430000**
Basic module	UR20-BM-SP	5	**1350930000**
Plug-in connector unit	UR20-PK-1506910000-SP	5	**1518820000**
Note	Note: please order plug (1469340000) separately.		

8AI-I-16-HD

- 8 analogue inputs
- 16-bit resolution
- 2-wire, 3-wire and 3-wire+FE connection
- Accuracy 0.1 % FSR
- HD plug

UR20-8AI-I-16-HD

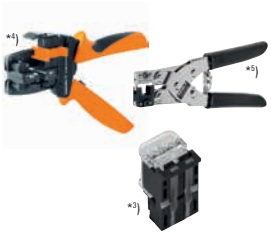

Note: Please order connector separately

Technical data

System data	
Interface	u-remote system bus
Transmission speed of system bus, max.	48 Mbit
Galvanic isolation	Yes, between field and system bus
Supply	
Voltage supply	24 V DC +20 %/ -15 %, via the system bus
Current consumption I_{IN} (power segment of the field bus coupler), typ.	8 mA
Current consumption I_{IN} (the respective power segment)	20 mA + load
Analogue inputs	
Number of analogue inputs	8
Input value	Current I (0...20 mA, 4...20 mA)
Resolution	16 Bit
Accuracy	0.1% FSR
Sensor supply	Yes
Sensor connection	2-wire, 3-wire, 3-wire + FE
Conversion time	1 ms
Internal resistance I	50 Ω
Reverse polarity protection	Yes
Module diagnosis	Yes
Individual channel diagnosis	No
Short-circuit-proof	Yes
General data	
Weight	74 g
Dimensions H x W x D	120 mm / 11.5 mm / 76 mm
Note	

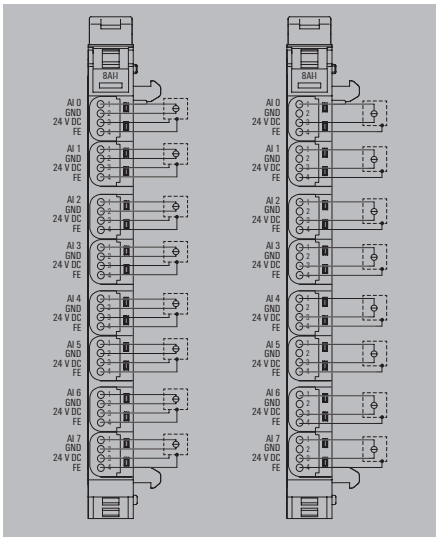

Product standard	IEC 61131-2
EMC	EN 61000
ATEX	EN 60079
UL	UL 61010-2-201
MSIP	MSIP-REM-WMG-1315650000

Ordering data

Module variants	Type	Qty.	Order No.
Analogue input module, 8 channels, 16 Bits, HD-plug	UR20-8AI-I-16-HD	1	**1315650000**
Note			

Accessories

	Type	Qty.	Order No.
Coding elements	KOSM BHZ5.00	100	**1483050000**
Termination kit	UR20-EBK-ACC	5	**1346610000**
Swivel marker	UR20-SM-ACC	20	**1339920000**
*3) HD plug	UR20-PG0.35	8	**1469340000**
*4) Stripping tool	MULTI-STRIPAX 6-16	1	**9202210000**
*5) Pressing tool	PWZ-UR20-HD	1	**1525820000**
Module marker for custom printing	DEK 5/8-11.5 MC SDR	100	**1341610000**
Module marker for neutral	DEK 5/8-11.5 MC NE WS	500	**1341630000**
Thermotransfer version (Material: Polyester)	THM UR20 GE	1	**1429910000**
Thermotransfer version (material: polyester)	THM UR20 WS	1	**1429420000**
Paper version for Laserprinter	ESO UR20 DIN A4 WS	10	**1429430000**
Replacement parts			
Electronic module	UR20-EM-1315650000-SP	1	**1347240000**
Basic module	UR20-BM-SP	5	**1350930000**
Plug-in connector unit	UR20-PK-1315650000-SP	5	**1559740000**
Note	Note: please order plug (1469340000) separately.		

8AI-I-16-DIAG-HD

- Advanced diagnosis functions
- 8 analogue inputs
- 16-bit resolution
- 2-wire, 3-wire and 3-wire+FE connection
- Accuracy 0.1 % FSR

UR20-8AI-I-16-DIAG-HD

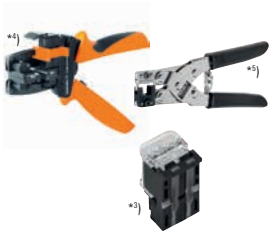

Note: Please order connector separately

Technical data

System data	
Interface	u-remote system bus
Transmission speed of system bus, max.	48 Mbit
Galvanic isolation	Yes, between field and system bus
Supply	
Voltage supply	24 V DC +20 %/ -15 %, via the system bus
Current consumption I_{IN} (power segment of the field bus coupler), typ.	8 mA
Current consumption I_{IN} (the respective power segment)	20 mA + load
Analogue inputs	
Number of analogue inputs	8
Input value	Current I (0...20 mA, 4...20 mA)
Resolution	16 Bit
Accuracy	0.1% FSR
Sensor supply	Yes
Sensor connection	2-wire, 3-wire, 3-wire + FE
Conversion time	1 ms
Internal resistance I	50 Ω
Reverse polarity protection	Yes
Module diagnosis	Yes
Individual channel diagnosis	Yes
Short-circuit-proof	Yes
General data	
Weight	74 g
Dimensions H x W x D	120 mm / 11.5 mm / 76 mm
Note	

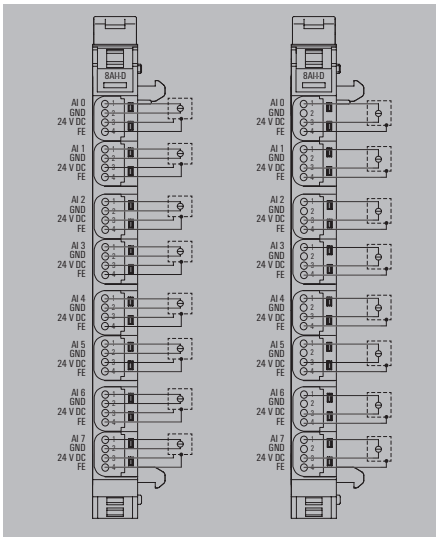

Product standard	IEC 61131-2
EMC	EN 61000
ATEX	EN 60079
UL	UL 61010-2-201
MSIP	MSIP-REM-WMG-1315720000

Ordering data

Module variants	Type	Qty.	Order No.
Analogue input module, 4 channels, diagnosis functions, HD-plug	UR20-8AI-I-16-DIAG-HD	1	**1315720000**
Note			

Accessories

	Type	Qty.	Order No.
Coding elements	KOSM BHZ5.00	100	**1483050000**
Termination kit	UR20-EBK-ACC	5	**1346610000**
Swivel marker	UR20-SM-ACC	20	**1339920000**
*3) HD plug	UR20-PG0.35	8	**1469340000**
*4) Stripping tool	MULTI-STRIPAX 6-16	1	**9202210000**
*5) Pressing tool	PWZ-UR20-HD	1	**1525820000**
Module marker for custom printing	DEK 5/8-11.5 MC SDR	100	**1341610000**
Module marker for neutral	DEK 5/8-11.5 MC NE WS	500	**1341630000**
Thermotransfer version (Material: Polyester)	THM UR20 GE	1	**1429910000**
Thermotransfer version (material: polyester)	THM UR20 WS	1	**1429420000**
Paper version for Laserprinter	ESO UR20 DIN A4 WS	10	**1429430000**
Replacement parts			
Electronic module	UR20-EM-1315720000-SP	1	**1347320000**
Basic module	UR20-BM-SP	5	**1350930000**
Plug-in connector unit	UR20-PK-1315720000-SP	5	**1559750000**
Note	Note: please order plug (1469340000) separately.		

8AI-I-PLC-INT

- 8 analogue inputs
- Rapid cabling with flat ribbon cable
- 0/4 to 20 mA with 0.1 % accuracy with a 16-bit resolution
- Inputs can be parameterised (passive or active operating mode)

UR20-8AI-I-PLC-INT

Technical data

System data	
Interface	u-remote system bus
Transmission speed of system bus, max.	48 Mbit/s
Galvanic isolation	DC 500 V between current paths
Supply	
Voltage supply	24 V DC +20 %/ -15 %, via the system bus
Current consumption I_{IN} (power segment of the field bus coupler), typ.	8 mA
Current consumption I_{IN} (the respective power segment)	< 20 mA
Analogue inputs	
Number of analogue inputs	8
Type	Current input
Resolution	16 Bit
Accuracy	0.1% FSR
Sensor supply	external
Sensor connection	PLC interface unit
Conversion time	1 ms
Internal resistance I	50 Ω
Reverse polarity protection	Yes
Module diagnosis	Yes
Individual channel diagnosis	No
Short-circuit-proof	Yes
General data	
Weight	85 g
Dimensions H x W x D	120 mm / 11.5 mm / 76 mm
Note	

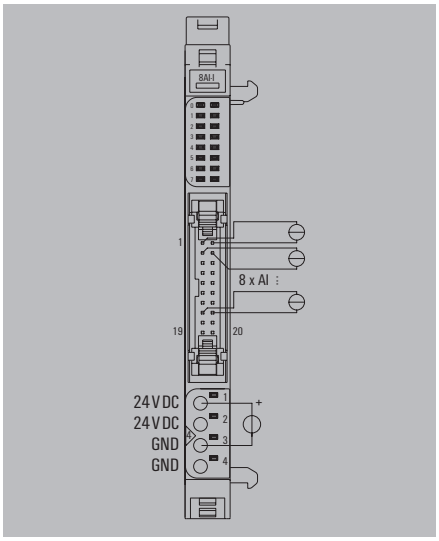

Product standard	IEC 61131-2
EMC	EN 61000
ATEX	EN 60079
UL	UL 508
MSIP	MSIP-REM-WMG-1315670000

Ordering data

Module variants	Type	Qty.	Order No.
Analogue input module, 8 channels, PLC interface	UR20-8AI-I-PLC-INT	1	**1315670000**
Note			

Accessories

	Type	Qty.	Order No.
Coding elements	KOSM BHZ5.00	100	**1483050000**
Termination kit	UR20-EBK-ACC	5	**1346610000**
Swievel marker	UR20-SM-ACC	20	**1339920000**
Connection marker for pusher custom printing	PM 2.7/2.6 MC SDR	192	**1323700000**
Connection marker for pusher neutral	PM 2.7/2.6 MC NE WS	960	**1323710000**
Module marker for custom printing	DEK 5/8-11.5 MC SDR	100	**1341610000**
Module marker for neutral	DEK 5/8-11.5 MC NE WS	500	**1341630000**
Thermotransfer version (Material: Polyester)	THM UR20 GE	1	**1429910000**
Thermotransfer version (material: polyester)	THM UR20 WS	1	**1429420000**
Paper version for Laserprinter	ESO UR20 DIN A4 WS	10	**1429430000**
PLC interface element	RS F20 LP2N 5/20	1	**0224261001**
Pre-assembled cable, 1m	PAC-UNIV-HE20-LCH-1M	1	**7789306010**
Replacement parts			
Electronic module	UR20-EM-1315670000-SP	1	**1347250000**
Basic module	UR20-BM-SP	5	**1350930000**
Plug-in connector unit	UR20-PK-1315670000-SP	5	**1483950000**
Note	1 roll = 1000 label = 1 Qty. 1 sheet = 60 label = 1 Qty.		

4AI-UI-DIF-16-DIAG

- 4 differential analog inputs
- Advanced diagnosis functions
- Parameterizable inputs (voltage, current)
- 16-bit resolution
- 2-wire, 3-wire and 4-wire
- Accuracy 0.1% FSR

UR20-4AI-UI-DIF-16-DIAG

Technical data

System data	
Interface	u-remote system bus
Transmission speed of system bus, max.	48 Mbit
Galvanic isolation	500 V DC between the current paths
Supply	
Voltage supply	24 V DC +20 %/ -15 %, via the system bus
Current consumption I_{IN} (power segment of the field bus coupler), typ.	8 mA
Current consumption I_{IN} (the respective power segment)	30 mA
Analogue inputs	
Number of analogue inputs	4
Input value	Voltage U (0...5 V, ±5 V, 0...10 V, ±10 V, 1...5 V, 2...10 V), Current I (0...20 mA, 4...20 mA)
Resolution	16 Bit
Accuracy	0.1% FSR
Sensor supply	Yes
Sensor supply	500mA
Sensor connection	2-wire, 3-wire, 4-wire
Input type	Differential input
Common mode range	-30V...30V
Conversion time	1 ms
Internal resistance I	18 Ω
Reverse polarity protection	Yes
Module diagnosis	Yes
Individual channel diagnosis	Yes
Short-circuit-proof	Yes
General data	
Weight	90 g
Dimensions H x W x D	120 mm / 11.5 mm / 76 mm
Note	

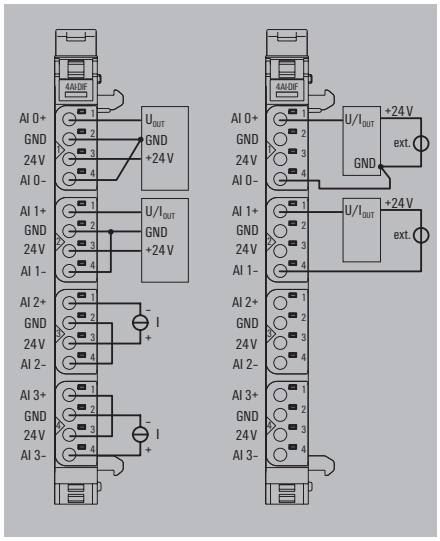

Product standard	IEC 61131-2
EMC	EN 61000
ATEX	EN 60079
UL	UL 61010-2-201
MSIP	MSIP-REM-WMG-1993880000

ABS (American Bureau of Shipping)
BSH (Federal Maritime and Hydrographic Agency of Germany)
BV (Bureau Veritas)
DNV GL (Det Norske Veritas) (Germanischer Lloyd)
LR (Lloyd's Register)
RINA (Registro Italiano Navale)

Ordering data

Module variants	Qty.	Order No.
Analogue input module, 4 channels, 16 Bits, Differential inputs		
UR20-4AI-UI-DIF-16-DIAG	1	**1993880000**
Note		

Accessories

	Qty.	Order No.
Coding elements	100	**1483050000**
Termination kit	5	**1346610000**
Swivel marker	20	**1339920000**
Connection marker for pusher custom printing	192	**1323700000**
Connection marker for pusher neutral	960	**1323710000**
Module marker for custom printing	100	**1341610000**
Module marker for neutral	500	**1341630000**
Thermotransfer version (Material: Polyester)	1	**1429910000**
Thermotransfer version (material: polyester)	1	**1429420000**
Paper version for Laserprinter	10	**1429430000**
Replacement parts		
Electronic module	1	**2446190000**
Basic module	5	**1350930000**
Plug-in connector unit	5	**2446200000**
Note		
1 roll = 1000 label = 1 Qty. 1 sheet = 60 label = 1 Qty.		

4AI-UI-DIF-32-DIAG

- 4 differential analog inputs
- Advanced diagnosis functions
- Parameterizable inputs (voltage, current)
- 16-bit resolution
- 2-wire, 3-wire and 4-wire
- Accuracy 0.1% FSR

UR20-4AI-UI-DIF-32-DIAG

Technical data

System data	
Interface	u-remote system bus
Transmission speed of system bus, max.	64 Mbit
Galvanic isolation	500 V DC between the current paths
Supply	
Voltage supply	24 V DC +20 %/ -15 %, via the system bus
Current consumption I_{IN} (power segment of the field bus coupler), typ.	8 mA
Current consumption I_{IN} (the respective power segment)	30 mA
Analogue inputs	
Number of analogue inputs	4
Input value	Voltage U (0...5 V, ±5 V, 0...10 V, ±10 V, 1...5 V, 2...10 V), Current I (0...20 mA, 4...20 mA)
Resolution	16 Bit
Accuracy	0.1% FSR
Sensor supply	Yes
Sensor supply	500mA
Sensor connection	2-wire, 3-wire, 4-wire
Input type	Differential input
Common mode range	-30V...30V
Conversion time	1 ms
Internal resistance I	16 Ω
Reverse polarity protection	Yes
Module diagnosis	Yes
Individual channel diagnosis	Yes
Short-circuit-proof	Yes
General data	
Weight	90 g
Dimensions H x W x D	120 mm / 11.5 mm / 76 mm
Note	

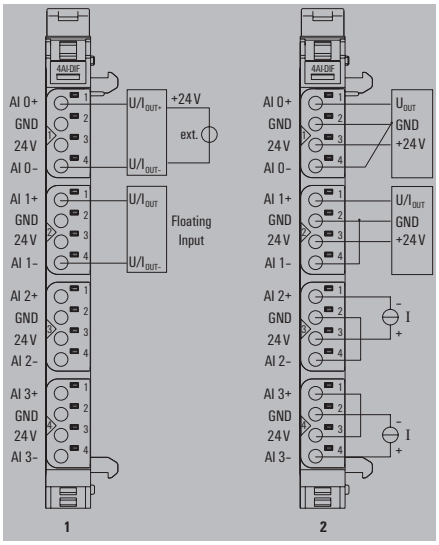

Product standard	IEC 61131-2
EMC	EN 61000
ATEX	EN 60079
UL	UL 61010-2-201
MSIP	

Ordering data

Module variants	Qty.	Order No.
Analogue input module, 4 channels, 32 Bits, Differential inputs		
Note		
UR20-4AI-UI-DIF-32-DIAG	1	**2544660000**

Accessories

	Qty.	Order No.
Termination kit	5	**1346610000**
Swievel marker	20	**1339920000**
Connection marker for pusher neutral	960	**1323710000**
Connection marker for pusher custom printing	192	**1323700000**
Module marker for custom printing	100	**1341610000**
Module marker for neutral	500	**1341630000**
Replacement parts		
Electronic module	1	**2550610000**
Basic module	5	**1350930000**
Plug-in connector unit	5	**2550620000**
Note		

Temperature modules and potentiometer input module

Available for TC and RTD; 16-bit resolution; 50/60 Hz suppression

The recording of resistance temperature and thermocoupler sensors is indispensable for many applications. The 4-channel input modules from Weidmüller are designed for all common thermal elements and resistance temperature sensors. With an accuracy of 0.2 % of the measurement range end value and a resolution of 16 bits, cable breaks and instances of the limit value being exceeded or falling below are detected by means of individual channel diagnosis. Additional features such as an automatic 50-Hz to 60-Hz suppression or external as well as internal cold-junction compensation, as are available with the TC module, round off the scope of function.

The potentiometer input module allows direct connection of potentiometers. By integrated reference voltage (+ 10V), a measurement of 300 Ω to 50 kΩ is possible. By a very fast conversion time of up to 500 µs the module is suited for demanding positioning tasks.

UR20-4AI-RTD-DIAG

UR20-4AI-RTD-HP-DIAG

UR20-8AI-RTD-DIAG-2W

UR20-4AI-TC-DIAG

UR20-4AI-R-HS-16-DIAG

4AI-RTD-DIAG

- 16-bit resolution
- Individual channel diagnosis
- Automatic 50 and 60 Hz suppression
- For 2-, 3- and 4-wire RTDs
- High accuracy
- For virtually all common sensors
- Temperature measurement via resistor

UR20-4AI-RTD-DIAG

Technical data

System data	
Interface	u-remote system bus
Transmission speed of system bus, max.	48 Mbit
Galvanic isolation	DC 500 V between current paths
Supply	
Voltage supply	24 V DC +20 %/ -15 %, via the system bus
Current consumption I_{IN} (power segment of the field bus coupler), typ.	8 mA
Current consumption I_{IN} (the respective power segment)	< 20 mA
Analogue inputs	
Number of analogue inputs	4
Type	Pt100, Pt200, Pt500, Pt1000, Ni100, Ni120, Ni 200, Ni500, Ni1000, Cu10, 40Ω, 80Ω, 150Ω, 300Ω, 500Ω,1kΩ, 2kΩ,4kΩ
Resolution	16 Bit
Accuracy	0.2% FSR / 0.3% FSR for Ni sensors / 0.6% FSR for Cu10
Sensor connection	2-wire, 3-wire, 4-wire
Temperature coefficient	≤ 50 ppm/K
Temperature range	-200...850 °C
Conversion time	adjustable, 36...240 ms
Internal resistance U	1 MΩ
Reverse polarity protection	Yes
Module diagnosis	Yes
Individual channel diagnosis	Yes
General data	
Weight	91 g
Dimensions H x W x D	120 mm / 11.5 mm / 76 mm
Note	

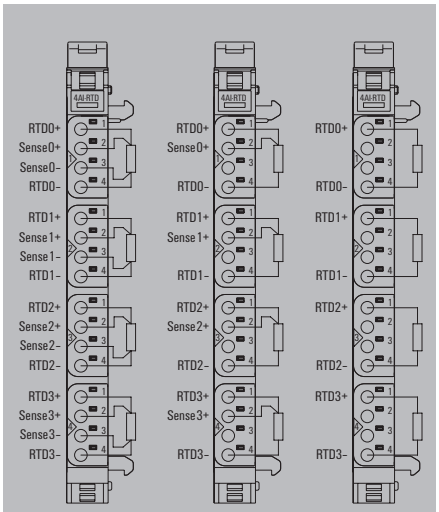

Product standard	IEC 61131-2
EMC	EN 61000
ATEX	EN 60079
UL	UL 61010-2-201
MSIP	MSIP-REM-WMG-1315700000

ABS (American Bureau of Shipping)
BSH (Federal Maritime and Hydrographic Agency of Germany)
BV (Bureau Veritas)
DNV GL (Det Norske Veritas) (Germanischer Lloyd)
LR (Lloyd's Register)
RINA (Registro Italiano Navale)

Ordering data

Module variants	Type	Qty.	Order No.
Analogue input module, 4 channels, RTD	UR20-4AI-RTD-DIAG	1	**1315700000**
Note			

Accessories

	Type	Qty.	Order No.
Coding elements	KOSM BHZ5.00	100	**1483050000**
Termination kit	UR20-EBK-ACC	5	**1346610000**
Swivel marker	UR20-SM-ACC	20	**1339920000**
Connection marker for pusher custom printing	PM 2.7/2.6 MC SDR	192	**1323700000**
Connection marker for pusher neutral	PM 2.7/2.6 MC NE WS	960	**1323710000**
Module marker for custom printing	DEK 5/8-11.5 MC SDR	100	**1341610000**
Module marker for neutral	DEK 5/8-11.5 MC NE WS	500	**1341630000**
Thermotransfer version (Material: Polyester)	THM UR20 GE	1	**1429910000**
Thermotransfer version (material: polyester)	THM UR20 WS	1	**1429420000**
Paper version for Laserprinter	ESO UR20 DIN A4 WS	10	**1429430000**
Replacement parts			
Electronic module	UR20-EM-1315700000-SP	1	**1347290000**
Basic module	UR20-BM-SP	5	**1350930000**
Plug-in connector unit	UR20-PK-1315700000-SP	5	**1484040000**
Note	1 roll = 1000 label = 1 Qty. 1 sheet = 60 label = 1 Qty.		

4AI-RTD-HP-DIAG

- 16-bit resolution
- Individual channel diagnosis
- For 2-,3- and 4wire RTDs
- High accuracy
- For virtually all common sensors
- Temperature measurement via resistor

UR20-4AI-RTD-HP-DIAG

Technical data

System data	
Interface	u-remote system bus
Transmission speed of system bus, max.	48 Mbit
Galvanic isolation	500 V DC between the current paths
Supply	
Voltage supply	24 V DC +20 %/ -15 %, via the system bus
Current consumption I_{IN} (power segment of the field bus coupler), typ.	8 mA
Current consumption I_{IN} (the respective power segment)	< 20 mA
Analogue inputs	
Number of analogue inputs	4
Type	Pt100, Pt200, Pt500, Pt1000, Ni100, Ni120, Ni 200, Ni500, Ni1000, Cu10, 40Ω, 80Ω, 150Ω, 300Ω, 500Ω,1kΩ, 2kΩ,4kΩ
Resolution	16 Bit
Accuracy	max. 0,6 K for Measurement range Pt100 (-200 ... +250 °C), max. 0,2 % FSR for Pt sensors and resistance measurement (-200 ... +250 °C), max. 0,3 % FSR for Ni sensors, max. 0,6 % FSR for Cu10
Sensor connection	2-wire, 3-wire, 4-wire
Temperature coefficient	≤ 50 ppm/K
Temperature range	-200...850 °C
Conversion time	adjustable, 36...240 ms
Reverse polarity protection	Yes
Module diagnosis	Yes
Individual channel diagnosis	Yes
General data	
Weight	88 g
Dimensions H x W x D	120 mm / 11.5 mm / 76 mm
Note	

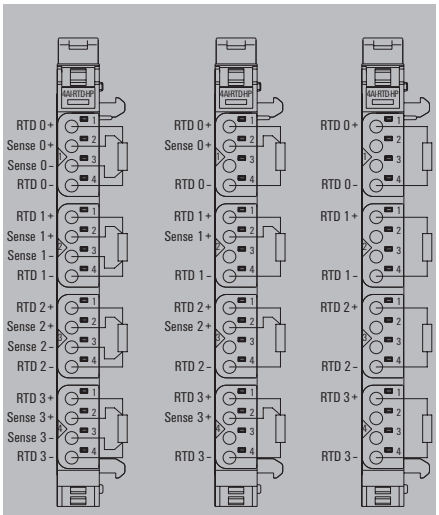

Product standard	IEC 61131-2
EMC	EN 61000
ATEX	EN 60079
UL	UL 61010-2-201
MSIP	MSIP-REM-WMG-2456540000

Ordering data

Module variants	Type	Qty.	Order No.
Analogue input module, 4 channels, RTD	UR20-4AI-RTD-HP-DIAG	1	**2456540000**
Note			

Accessories

	Type	Qty.	Order No.
Coding elements	KOSM BHZ5.00	100	**1483050000**
Termination kit	UR20-EBK-ACC	5	**1346610000**
Swievel marker	UR20-SM-ACC	20	**1339920000**
Connection marker for pusher custom printing	PM 2.7/2.6 MC SDR	192	**1323700000**
Connection marker for pusher neutral	PM 2.7/2.6 MC NE WS	960	**1323710000**
Module marker for custom printing	DEK 5/8-11.5 MC SDR	100	**1341610000**
Module marker for neutral	DEK 5/8-11.5 MC NE WS	500	**1341630000**
Thermotransfer version (Material: Polyester)	THM UR20 GE	1	**1429910000**
Thermotransfer version (material: polyester)	THM UR20 WS	1	**1429420000**
Paper version for Laserprinter	ESO UR20 DIN A4 WS	10	**1429430000**
Replacement parts			
Electronic module	UR20-EM-2456540000-SP	1	**2545620000**
Basic module	UR20-BM-SP	5	**1350930000**
Plug-in connector unit	UR20-PK-2456540000-SP	5	**2545610000**
Note			

8AI-RTD-DIAG-2W

- 16-bit resolution
- Individual channel diagnosis
- For 2-wire RTDs
- High accuracy
- For virtually all common sensors
- Temperature measurement via resistor

UR20-8AI-RTD-DIAG-2W

Technical data

System data	
Interface	u-remote system bus
Transmission speed of system bus, max.	48 Mbit
Galvanic isolation	500 V DC between the current paths
Supply	
Voltage supply	24 V DC +20 %/ -15 %, via the system bus
Current consumption I_{IN} (power segment of the field bus coupler), typ.	8 mA
Current consumption I_{IN} (the respective power segment)	< 20 mA
Analogue inputs	
Number of analogue inputs	8
Type	Pt100, Pt200, Pt500, Pt1000, Ni100, Ni120, Ni 200, Ni500, Ni1000, Cu10, 40Ω, 80Ω, 150Ω, 300Ω, 500Ω,1kΩ, 2kΩ,4kΩ
Resolution	16 Bit
Accuracy	0.2% FSR / 0.3% FSR for Ni sensors / 0.6% FSR for Cu10
Sensor connection	2-wire
Temperature coefficient	≤ 50 ppm/K
Temperature range	-200...850 °C
Conversion time	80 ms
Reverse polarity protection	Yes
Module diagnosis	Yes
Individual channel diagnosis	Yes
General data	
Weight	91 g
Dimensions H x W x D	120 mm / 11.5 mm / 76 mm
Note	

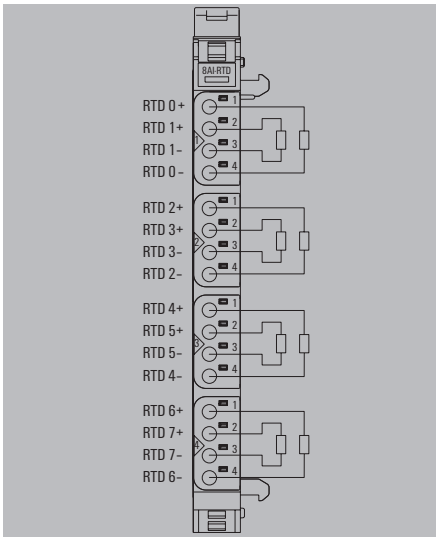

Product standard	IEC 61131-2
EMC	EN 61000
ATEX	EN 60079
UL	
MSIP	

Ordering data

Module variants	Type	Qty.	Order No.
Analogue input module, 8 channels, RTD	UR20-8AI-RTD-DIAG-2W	1	**2555940000**
Note			

Accessories

	Type	Qty.	Order No.
Coding elements	KOSM BHZ5.00	100	**1483050000**
Termination kit	UR20-EBK-ACC	5	**1346610000**
Swievel marker	UR20-SM-ACC	20	**1339920000**
Connection marker for pusher custom printing	PM 2.7/2.6 MC SDR	192	**1323700000**
Connection marker for pusher neutral	PM 2.7/2.6 MC NE WS	960	**1323710000**
Module marker for custom printing	DEK 5/8-11.5 MC SDR	100	**1341610000**
Module marker for neutral	DEK 5/8-11.5 MC NE WS	500	**1341630000**
Thermotransfer version (Material: Polyester)	THM UR20 GE	1	**1429910000**
Thermotransfer version (material: polyester)	THM UR20 WS	1	**1429420000**
Paper version for Laserprinter	ESO UR20 DIN A4 WS	10	**1429430000**
Replacement parts			
Electronic module	UR20-EM-2555940000-SP	1	**2593310000**
Basic module	UR20-BM-SP	5	**1350930000**
Plug-in connector unit	UR20-PK-2555940000-SP	5	**2593300000**
Note			

4AI-TC-DIAG

- 4 analogue inputs
- Various TC sensors
- High accuracy of 0.2 % FSR
- 16-bit resolution
- Individual channel diagnosis
- Internal or external cold-junction compensation possible
- Automatic 50 and 60 Hz suppression

UR20-4AI-TC-DIAG

Technical data

System data	
Interface	u-remote system bus
Transmission speed of system bus, max.	48 Mbit
Galvanic isolation	DC 500 V between current paths
Supply	
Voltage supply	24 V DC +20 %/ -15 %, via the system bus
Current consumption I_{IN} (power segment of the field bus coupler), typ.	8 mA
Current consumption I_{IN} (the respective power segment)	< 20 mA
Analogue inputs	
Number of analogue inputs	4
Type	J, K, T, B, N, E, R, S, L, U, C, mV
Resolution	16 Bit
Accuracy	0.2% FSR
Sensor connection	2-wire
cold junction compensation	Internal and external (int. accuracy ≤ 3 K)
Temperature coefficient	≤ 50 ppm/K
Temperature range	-200...2315 °C
Conversion time	adjustable, 36...240 ms
Internal resistance U	1 MΩ
Module diagnosis	Yes
Individual channel diagnosis	Yes
Reverse polarity protection	Yes
General data	
Weight	86 g
Dimensions H x W x D	120 mm / 11.5 mm / 76 mm
Note	

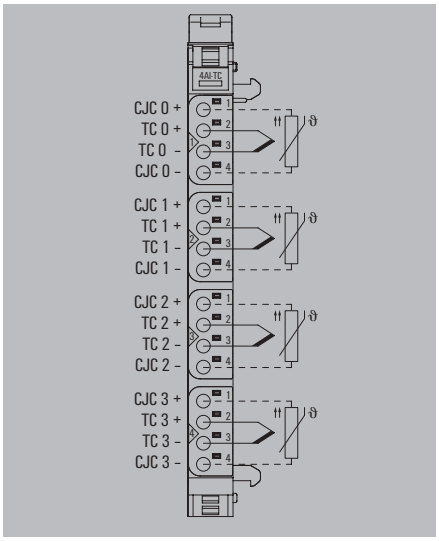

Product standard	IEC 61131-2
EMC	EN 61000
ATEX	EN 60079
UL	UL 61010-2-201
MSIP	MSIP-REM-WMG-1315710000

ABS (American Bureau of Shipping)
BSH (Federal Maritime and Hydrographic Agency of Germany)
BV (Bureau Veritas)
DNV GL (Det Norske Veritas) (Germanischer Lloyd)
LR (Lloyd's Register)
RINA (Registro Italiano Navale)

Ordering data

Module variants	Type	Qty.	Order No.
Analogue input module, 4 channels, thermocouple	UR20-4AI-TC-DIAG	1	1315710000
Note			

Accessories

	Type	Qty.	Order No.
Coding elements	KOSM BHZ5.00	100	1483050000
Termination kit	UR20-EBK-ACC	5	1346610000
Swivel marker	UR20-SM-ACC	20	1339920000
Connection marker for pusher custom printing	PM 2.7/2.6 MC SDR	192	1323700000
Connection marker for pusher neutral	PM 2.7/2.6 MC NE WS	960	1323710000
Module marker for custom printing	DEK 5/8-11.5 MC SDR	100	1341610000
Module marker for neutral	DEK 5/8-11.5 MC NE WS	500	1341630000
Thermotransfer version (Material: Polyester)	THM UR20 GE	1	1429910000
Thermotransfer version (material: polyester)	THM UR20 WS	1	1429420000
Paper version for Laserprinter	ESO UR20 DIN A4 WS	10	1429430000
Replacement parts			
Electronic module	UR20-EM-1315710000-SP	1	1435740000
Basic module	UR20-BM-SP	5	1350930000
Plug-in connector unit	UR20-PK-1315710000-SP	5	1484050000
Note	1 roll = 1000 label = 1 Qty. 1 sheet = 60 label = 1 Qty.		

4AI-R-HS-16-DIAG

- 4 potentiometer inputs
- Measuring range from 300 Ω ... 50 kΩ
- 500 µs conversion time
- 16 Bit resolution
- Accuracy <± 0.25 % FSR
- Individual calibration and scaling

UR20-4AI-R-HS-16-DIAG

Technical data

System data	
Interface	u-remote system bus
Transmission speed of system bus, max.	48 Mbit
Galvanic isolation	500 V DC between the current paths
Supply	
Voltage supply	24 V DC +20 %/ -15 %, via the system bus
Current consumption I_{IN} (power segment of the field bus coupler), typ.	8 mA
Current consumption I_{IN} (the respective power segment)	26 mA
Analogue inputs	
Number of analogue inputs	4
Sensor connection	3-wire, 3-wire + FE
Input value	Ratiometric potentiometer evaluation with own power supply
Measurement range	300 Ω ...50 kΩ
Conversion time	typ. 500 µs (typ. 625 µs at 50 Hz / typ. 521 µs at 60 Hz frequency suppression)
Resolution	16 Bit
Accuracy	< ± 0.25 % FSR at 25 °C
Temperature coefficient	≤ 50 ppm/K
Input resistance	typ. 500 kΩ against the wiper connection
Voltage supply	24 V DC +20 %/ -15 %, via the system bus
Current of supply voltage output	max. 0.05 A per channel, total 0.2 A
Wire-break recognition	Yes
Short-circuit-proof	Yes
Module diagnosis	Yes
Individual channel diagnosis	Yes
General data	
Weight	89 g
Dimensions H x W x D	120 mm / 11.5 mm / 76 mm
Note	

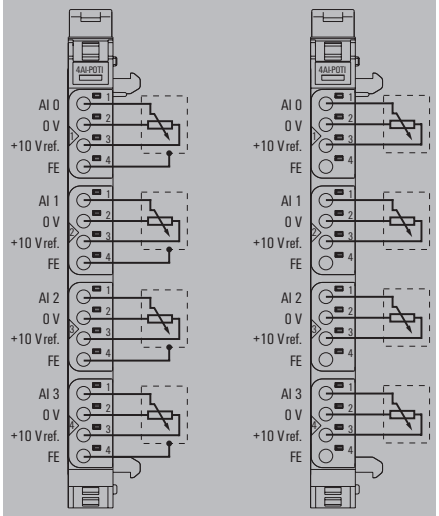

Ordering data

Module variants	Type	Qty.	Order No.
Analogue input module for potentiometer, 4 channels, 16 bits	UR20-4AI-R-HS-16-DIAG	1	**2001670000**
Note			

Product standard	IEC 61131-2
EMC	EN 61000
ATEX	EN 60079
UL	UL 61010-2-201
MSIP	MSIP-REM-WMG-2001670000

Accessories

	Type	Qty.	Order No.
Coding elements	KOSM BHZ5.00	100	**1483050000**
Termination kit	UR20-EBK-ACC	5	**1346610000**
Swivel marker	UR20-SM-ACC	20	**1339920000**
Connection marker for pusher custom printing	PM 2.7/2.6 MC SDR	192	**1323700000**
Connection marker for pusher neutral	PM 2.7/2.6 MC NE WS	960	**1323710000**
Module marker for custom printing	DEK 5/8-11.5 MC SDR	100	**1341610000**
Module marker for neutral	DEK 5/8-11.5 MC NE WS	500	**1341630000**
Thermotransfer version (Material: Polyester)	THM UR20 GE	1	**1429910000**
Thermotransfer version (material: polyester)	THM UR20 WS	1	**1429420000**
Paper version for Laserprinter	ESO UR20 DIN A4 WS	10	**1429430000**
Replacement parts			
Electronic module	UR20-EM-2001670000-SP	1	**2068640000**
Basic module	UR20-BM-SP	5	**1350930000**
Plug-in connector unit	UR20-PK-2001670000-SP	5	**2068610000**
Note	1 roll = 1000 label = 1 Qty. 1 sheet = 60 label = 1 Qty.		

Strain gauge module

2-channel module for u-remote load cell analysis

Measuring bridges in the form of strain gauges are used to measure weight, torque or oscillation. Fast or exact measurements are often required here, for example when it comes to determining computational data.

The strain gauge module from u-remote provides an accuracy of up to 0.01% with two 24-bit resolution channels. Calibration and gauging enable industrial applications. A tare function can be triggered per channel, processes are optimised and costs reduced. The Calibration by an independent body can be performed easily via the u-remote web server. User-friendly calibration via the web server has a password protection as well as documentation functionality in order to secure settings.

The u-remote strain gauge module enables the parallel analysis of measurement data from up to four load cells on a single channel.

UR20-2AI-SG-24-DIAG

2AI-SG-24-DIAG

- 2 differential inputs for DMS
- 24-bit resolution
- 4- or 6-wire connection
- Accuracy ±0.01% FSR
- Individual channel diagnosis

UR20-2AI-SG-24-DIAG

Technical data

System data	
Interface	u-remote system bus
Transmission speed of system bus, max.	48 Mbit
Galvanic isolation	500 V DC between the current paths
Supply	
Voltage supply	24 V DC +20 %/ -15 %, via the system bus
Current consumption I_{IN} (power segment of the field bus coupler), typ.	8 mA
Current consumption I_{IN} (the respective power segment)	35 mA
Analogue inputs	
Number of analogue inputs	2
Input value	Differential, to evaluate a strain gauge full-bridge
Resolution	24 bit per channel
Accuracy	Customer calibration: ±0.01% FSR (100 ppm), ±1% FSR (with interference)
Supported sensor sensitivity	0.5 mV - 30 V, parameterisable
Temperature coefficient	< 10 ppm/K
Permissible sensor load	85 ... 5000 Ω
Conversion time	5 - 800 ms, parameterisable
Measurement range	± 150 mV
Module diagnosis	Yes
Individual channel diagnosis	Yes
Short-circuit-proof	Yes
Digital inputs	
Input filter	10 ms
Input voltage, high	> 11 V
Input voltage, low	< 5 V
Individual channel diagnosis	Yes
Short-circuit-proof	Yes
Module diagnosis	Yes
Input type	Type 1 in acc. with IEC 61131-2, Type 3 in acc. with IEC 61131-2
General data	
Weight	90 g
Dimensions H x W x D	11.5 mm / 120 mm / 76 mm
Note	

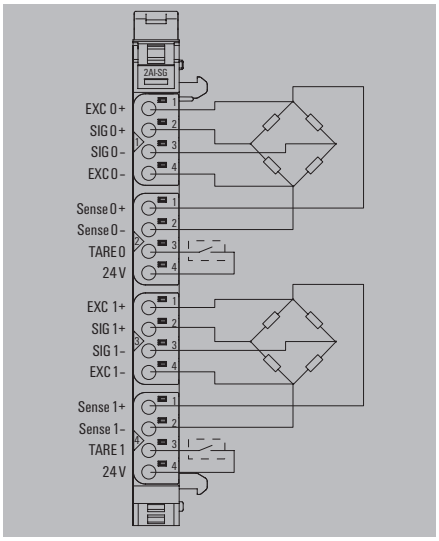

Product standard	IEC 61131-2
EMC	EN 61000
ATEX	EN 60079
UL	UL 61010-2-201
MSIP	MSIP-REM-WMG-1990070000

ABS (American Bureau of Shipping)
BSH (Federal Maritime and Hydrographic Agency of Germany)
BV (Bureau Veritas)
DNV GL (Det Norske Veritas) (Germanischer Lloyd)
LR (Lloyd's Register)
RINA (Registro Italiano Navale)

Ordering data

Module variants	Type	Qty.	Order No.
Strain gauge module, 2 channels	UR20-2AI-SG-24-DIAG	1	1990070000
Note			

Accessories

	Type	Qty.	Order No.
Coding elements	KOSM BHZ5.00	100	1483050000
Termination kit	UR20-EBK-ACC	5	1346610000
Swievel marker	UR20-SM-ACC	20	1339920000
Connection marker for pusher custom printing	PM 2.7/2.6 MC SDR	192	1323700000
Connection marker for pusher neutral	PM 2.7/2.6 MC NE WS	960	1323710000
Module marker for custom printing	DEK 5/8-11.5 MC SDR	100	1341610000
Module marker for neutral	DEK 5/8-11.5 MC NE WS	500	1341630000
Thermotransfer version (Material: Polyester)	THM UR20 GE	1	1429910000
Thermotransfer version (material: polyester)	THM UR20 WS	1	1429420000
Paper version for Laserprinter	ESO UR20 DIN A4 WS	10	1429430000
Replacement parts			
Electronic module	UR20-EM-1990070000-SP	5	1562260000
Basic module	UR20-BM-SP	5	1350930000
Plug-in connector unit	UR20-PK-1990070000-SP	5	2068620000
Note			

Power measurement module

Power measurement via 1- or 3-phase, rated voltage to 300 V_{eff}

The power measurement module is used for recording and processing of currents and voltages on one or three-phase loads up to a rated voltage of 300 V_{eff} AC (phase to neutral conductor). Reactive, apparent harmonic and active power, energy consumption, phase angle, and many other electrical parameters are measured or calculated by the module. The transmitted data via the process data of the different fieldbuses can be selected via parameters.

The Power measurement module can be easily integrated into existing automation solutions with u-remote. Using split-core current transformers it is not even necessary to intervene in the existing installation. Currents from 1 A or up to 5 A can be measured directly, higher currents can be measured with split-core or plugin current transformers from Weidmüller.

UR20-3EM-230V-AC

3EM-230V-AC

- 1- or 3-phase power measurement for 1 A or 5 A (with or without transformer)
- Measurement in the phase conductor
- 16 bit resolution
- Power-/ reactiv power measurement
- Energy meter Active / reactive
- Power factor
- Frequency measurement 45 ... 65 Hz
- Analysis of 31 harmonics

UR20-3EM-230V-AC

Technical data

System data	
Interface	u-remote system bus
Transmission speed of system bus, max.	48 Mbit
Galvanic isolation	500 V DC between the current paths
Supply	
Voltage supply	24 V DC +20 %/ -15 %, via the system bus
Current consumption I_{IN} (power segment of the field bus coupler), typ.	8 mA
Current consumption I_{IN} (the respective power segment)	12 mA
Analogue inputs	
Number	3
Rated voltage	300 V_{eff} (L-N)
Resolution	16 bit per channel (internal 24 bit)
Sampling rate of current measurement	3,300 samples/s
Frequency of the supply system	45...65 Hz
Analysis of harmonic	31 (Blackmann-Harris Window)
Power rating	0...1 A / 0...5 A AC
Insulation	1.5 kV_{eff} (input / system)
Nominal peak voltage	4
Category for voltage measurements	CAT II (IEC 61010 Part 1)
Measurement method	High Resolution Delta Sigma (current measurement in outer conductor)
Measurement accuracy	0.5% in relation to final value (U / I), 1% for the calculated values
Connectable converter ratios	1 ... 1000
Input impedance voltage	2.4 MΩ per channel
Measurement resistance (shunt)	4 mΩ (at 5 A), 20 mΩ (at 1 A)
General data	
Weight	90 g
Dimensions H x W x D	120 mm / 11.5 mm / 76 mm
Note	

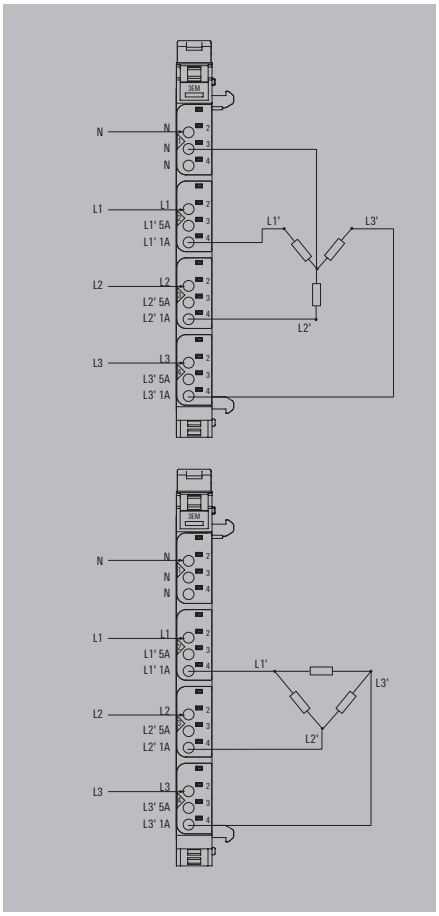

Ordering data

Module variants	Qty.	Order No.
Power measurement module, 3 channels		
Note		
UR20-3EM-230V-AC	1	**2007420000**

Accessories

	Qty.	Order No.
Coding elements	100	**1483050000**
Termination kit	5	**1346610000**
Swievel marker	20	**1339920000**
Connection marker for pusher custom printing	192	**1323700000**
Connection marker for pusher neutral	960	**1323710000**
Module marker for custom printing	100	**1341610000**
Module marker for neutral	500	**1341630000**
Thermotransfer version (Material: Polyester)	1	**1429910000**
Thermotransfer version (material: polyester)	1	**1429420000**
Paper version for Laserprinter	10	**1429430000**
Replacement parts		
Electronic module	1	**1562270000**
Basic module	5	**1350930000**
Plug-in connector unit	5	**2068630000**
Note		

Product standard	IEC 61131-2
EMC	EN 61000
ATEX	EN 60079
UL	UL 61010-2-201
MSIP	
ABS (American Bureau of Shipping)	
BSH (Federal Maritime and Hydrographic Agency of Germany)	
BV (Bureau Veritas)	
DNV GL (Det Norske Veritas) (Germanischer Lloyd)	
LR (Lloyd's Register)	
RINA (Registro Italiano Navale)	

Analogue output modules

2- or 4-wire connection; 16-bit resolution; 4 outputs

The analogue output module controls up to 4 analogue actuators with +/-10 V, +/-5 V, 0...10 V, 0...5 V, 2...10 V, 1...5 V, 0...20 mA or 4...20 mA with an accuracy of 0.05 % of the measurement range end value. An actuator with 2- or 4-wire technology can be connected to each plug-in connector. The outputs are defined channel by channel using parameterisation. A separate status LED is assigned to each channel.

The outputs are supplied from the output current path (U_{OUT}).

UR20-4AO-UI-16

UR20-4AO-UI-16-M

UR20-4AO-UI-16-DIAG

UR20-4AO-UI-16-M-DIAG

UR20-4AO-UI-16-HD

UR20-4AO-UI-16-DIAG-HD

4AO-UI-16

- 4 analogue outputs
- Outputs can be parameterised by channel (voltage, current)
- 16-bit resolution
- 2- and 4-wire connection
- Accuracy typ. 0.05% FSR
- Replacement values can be set per channel
- Reactionless
- Short-circuit-proof

UR20-4AO-UI-16

Technical data

System data	
Interface	u-remote system bus
Transmission speed of system bus, max.	48 Mbit
Galvanic isolation	DC 500 V between current paths
Supply	
Voltage supply	24 V DC +20 %/ -15 %, via the system bus
Current consumption I_{IN} (power segment of the field bus coupler), typ.	8 mA
Current consumption from I_{OUT} (the respective power segment)	85 mA
Analogue outputs	
Number of analogue outputs	4
Output variable	Voltage (0...5 V, 0...10 V, 1...5 V, 2...10 V, ±10 V, ±5 V), Current (0...20 mA or 4...20 mA)
Response time	1 ms / 4 channels
Resolution	16 Bit
Accuracy	±0,1 % FSR max., 0,05 % FSR typ.
load impedance voltage	> 1 kΩ (at >50 °C ambient temperature, max. total sensor current = 25 mA)
load impedance current	< 600 Ω
Actuator connection	2-wire (automatic detection), 4-wire
Temperature coefficient	20 ppm voltage / 31 ppm current measurement / °K
Max. error between T min. and T max.	220 ppm FSR
Monotonicity	Yes
Cross-talk between the channels	0.001 % FSR
Repeat accuracy	< 1 mV eff.
Module diagnosis	Yes
Substitute values	Yes
General data	
Weight	86 g
Dimensions H x W x D	120 mm / 11.5 mm / 76 mm
Note	

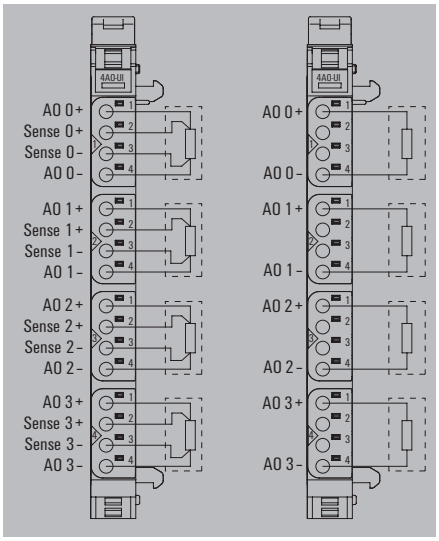

Product standard	IEC 61131-2
EMC	EN 61000
ATEX	EN 60079
UL	UL 61010-2-201
MSIP	MSIP-REM-WMG-1315680000

Ordering data

Module variants	Type	Qty.	Order No.
Analogue output module, 4 channels, 16 Bit	UR20-4AO-UI-16	1	1315680000
Note			

Accessories

	Type	Qty.	Order No.
Coding elements	KOSM BHZ5.00	100	1483050000
Termination kit	UR20-EBK-ACC	5	1346610000
Swivel marker	UR20-SM-ACC	20	1339920000
Connection marker for pusher custom printing	PM 2.7/2.6 MC SDR	192	1323700000
Connection marker for pusher neutral	PM 2.7/2.6 MC NE WS	960	1323710000
Module marker for custom printing	DEK 5/8-11.5 MC SDR	100	1341610000
Module marker for neutral	DEK 5/8-11.5 MC NE WS	500	1341630000
Thermotransfer version (Material: Polyester)	THM UR20 GE	1	1429910000
Thermotransfer version (material: polyester)	THM UR20 WS	1	1429420000
Paper version for Laserprinter	ESO UR20 DIN A4 WS	10	1429430000
Replacement parts			
Electronic module	UR20-EM-1315680000-SP	1	1347270000
Basic module	UR20-BM-SP	5	1350930000
Plug-in connector unit	UR20-PK-1315680000-SP	5	1484070000
Note	1 roll = 1000 label = 1 Qty. 1 sheet = 60 label = 1 Qty.		

4AO-UI-16-M

- Approved for ship automation
- 4 analogue outputs
- Outputs can be parameterised by channel (voltage, current)
- 16-bit resolution
- 2- and 4-wire connection
- Accuracy typ. 0.05% FSR
- Replacement values can be set per channel
- Reactionless
- Short-circuit-proof

UR20-4AO-UI-16-M

Technical data

System data	
Interface	u-remote system bus
Transmission speed of system bus, max.	48 Mbit
Galvanic isolation	DC 500 V between current paths
Supply	
Voltage supply	24 V DC +30 %/ -25 %, via the system bus
Current consumption I_{IN} (power segment of the field bus coupler), typ.	8 mA
Current consumption from I_{OUT} (the respective power segment)	85 mA
Analogue outputs	
Number of analogue outputs	4
Output variable	Voltage (0...5 V, 0...10 V, 1...5 V, 2...10 V, ±10 V, ±5 V), Current (0...20 mA or 4...20 mA)
Response time	1 ms / 4 channels
Resolution	16 Bit
Accuracy	±0,1 % FSR max., 0,05 % FSR typ.
load impedance voltage	> 1 kΩ (at >50 °C ambient temperature, max. total sensor current = 25 mA)
load impedance current	< 600 Ω
Actuator connection	2-wire (automatic detection), 4-wire
Temperature coefficient	20 ppm voltage / 31 ppm current measurement / °K
Max. error between T min. and T max.	220 ppm FSR
Monotonicity	Yes
Cross-talk between the channels	0.001 % FSR
Repeat accuracy	< 1 mV eff.
Module diagnosis	Yes
Substitute values	Yes
General data	
Weight	94 g
Dimensions H x W x D	120 mm / 11.5 mm / 76 mm
Note	

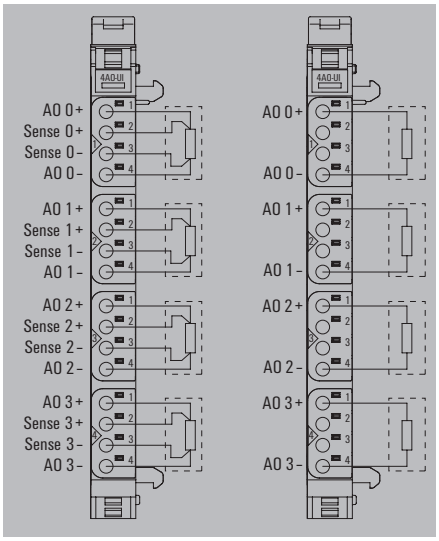

Product standard	IEC 61131-2
EMC	EN 61000
ATEX	EN 60079
UL	UL 61010-2-201
MSIP	
ABS (American Bureau of Shipping)	
BSH (Federal Maritime and Hydrographic Agency of Germany)	
BV (Bureau Veritas)	
DNV GL (Det Norske Veritas) (Germanischer Lloyd)	
LR (Lloyd's Register)	
RINA (Registro Italiano Navale)	

Ordering data

Module variants	Type	Qty.	Order No.
Analogue output module, 4 channels, 16 Bit	UR20-4AO-UI-16-M	1	2453880000
Note			

Accessories

	Type	Qty.	Order No.
Coding elements	KOSM BHZ5.00	100	1483050000
Termination kit	UR20-EBK-ACC	5	1346610000
Swievel marker	UR20-SM-ACC	20	1339920000
Connection marker for pusher custom printing	PM 2.7/2.6 MC SDR	192	1323700000
Connection marker for pusher neutral	PM 2.7/2.6 MC NE WS	960	1323710000
Module marker for custom printing	DEK 5/8-11.5 MC SDR	100	1341610000
Module marker for neutral	DEK 5/8-11.5 MC NE WS	500	1341630000
Thermotransfer version (Material: Polyester)	THM UR20 GE	1	1429910000
Thermotransfer version (material: polyester)	THM UR20 WS	1	1429420000
Paper version for Laserprinter	ESO UR20 DIN A4 WS	10	1429430000
Replacement parts			
Electronic module	UR20-EM-2453880000-SP	1	2508790000
Basic module	UR20-BM-SP	5	1350930000
Plug-in connector unit	UR20-PK-2453880000-SP	5	2508770000
Note	1 roll = 1000 label = 1 Qty. 1 sheet = 60 label = 1 Qty.		

4AO-UI-16-DIAG

- Extended diagnostic function
- 4 analogue outputs
- Outputs can be parameterised by channel (voltage, current)
- 16-bit resolution
- 2- and 4-wire connection
- Accuracy typ. 0.05% FSR
- Replacement values can be set per channel
- Reactionless
- Short-circuit-proof

UR20-4AO-UI-16-DIAG

Technical data

System data	
Interface	u-remote system bus
Transmission speed of system bus, max.	48 Mbit
Galvanic isolation	500 V DC between the current paths
Supply	
Voltage supply	24 V DC +20 %/ -15 %, via the system bus
Current consumption I_{IN} (power segment of the field bus coupler), typ.	8 mA
Current consumption from I_{OUT} (the respective power segment)	85 mA
Analogue outputs	
Number of analogue outputs	4
Output variable	Voltage (0...5 V, 0...10 V, 1...5 V, 2...10 V, ±10 V, ±5 V), Current (0...20 mA or 4...20 mA)
Response time	1 ms / 4 channels
Resolution	16 Bit
Accuracy	±0,1 % FSR max., 0,05 % FSR typ.
load impedance voltage	> 1 kΩ (at >50 °C ambient temperature, max. total sensor current = 25 mA)
load impedance current	< 600 Ω
Actuator connection	2-wire (automatic detection), 4-wire
Temperature coefficient	20 ppm voltage / 31 ppm current measurement / °K
Max. error between T min. and T max.	220 ppm FSR
Monotonicity	Yes
Cross-talk between the channels	0.001 % FSR
Repeat accuracy	< 1 mV eff.
Module diagnosis	Yes
Individual channel diagnosis	Yes
Substitute values	Yes
General data	
Weight	86 g
Dimensions H x W x D	120 mm / 11.5 mm / 76 mm
Note	

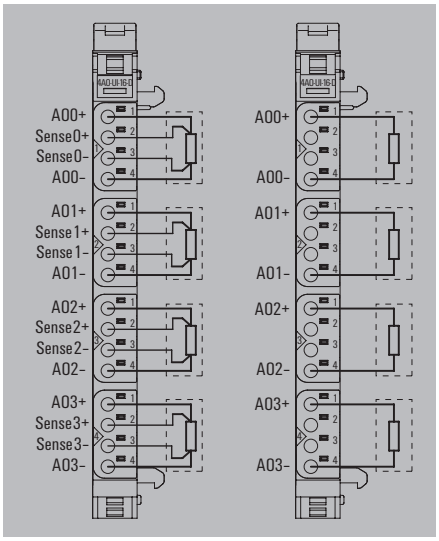

Product standard	IEC 61131-2
EMC	EN 61000
ATEX	EN 60079
UL	UL 61010-2-201
MSIP	MSIP-REM-WMG-1315730000

Ordering data

Module variants	Type	Qty.	Order No.
Analogue output module, 4 channels, 16 Bits, diagnosis functions	UR20-4AO-UI-16-DIAG	1	**1315730000**
Note			

Accessories

	Type	Qty.	Order No.
Coding elements	KOSM BHZ5.00	100	**1483050000**
Termination kit	UR20-EBK-ACC	5	**1346610000**
Swievel marker	UR20-SM-ACC	20	**1339920000**
Connection marker for pusher custom printing	PM 2.7/2.6 MC SDR	192	**1323700000**
Connection marker for pusher neutral	PM 2.7/2.6 MC NE WS	960	**1323710000**
Module marker for custom printing	DEK 5/8-11.5 MC SDR	100	**1341610000**
Module marker for neutral	DEK 5/8-11.5 MC NE WS	500	**1341630000**
Thermotransfer version (Material: Polyester)	THM UR20 GE	1	**1429910000**
Thermotransfer version (material: polyester)	THM UR20 WS	1	**1429420000**
Paper version for Laserprinter	ESO UR20 DIN A4 WS	10	**1429430000**
Replacement parts			
Electronic module	UR20-EM-1315730000-SP	1	**1347330000**
Basic module	UR20-BM-SP	5	**1350930000**
Plug-in connector unit	UR20-PK-1315730000-SP	5	**1518880000**
Note	1 roll = 1000 label = 1 Qty. 1 sheet = 60 label = 1 Qty.		

4AO-UI-16-M-DIAG

- Approved for ship automation
- Extended diagnostic function
- 4 analogue outputs
- Outputs can be parameterised by channel (voltage, current)
- 16-bit resolution
- 2- and 4-wire connection
- Accuracy typ. 0.05% FSR
- Replacement values can be set per channel

UR20-4AO-UI-16-M-DIAG

Technical data

System data	
Interface	u-remote system bus
Transmission speed of system bus, max.	48 Mbit
Galvanic isolation	DC 500 V between current paths
Supply	
Voltage supply	24 V DC +30 %/ -25 %, via the system bus
Current consumption I_{IN} (power segment of the field bus coupler), typ.	8 mA
Current consumption from I_{OUT} (the respective power segment)	85 mA
Analogue outputs	
Number of analogue outputs	4
Output variable	Voltage (0...5 V, 0...10 V, 1...5 V, 2...10 V, ±10 V, ±5 V), Current (0...20 mA or 4...20 mA)
Response time	1 ms / 4 channels
Resolution	16 Bit
Accuracy	±0,1 % FSR max., 0,05 % FSR typ.
load impedance voltage	> 1 kΩ (at >50 °C ambient temperature, max. total sensor current = 25 mA)
load impedance current	< 600 Ω
Actuator connection	2-wire (automatic detection), 4-wire
Temperature coefficient	20 ppm voltage / 31 ppm current measurement / °K
Max. error between T min. and T max.	220 ppm FSR
Monotonicity	Yes
Cross-talk between the channels	0.001 % FSR
Repeat accuracy	< 1 mV eff.
Module diagnosis	Yes
Individual channel diagnosis	Yes
Substitute values	Yes
General data	
Weight	94 g
Dimensions H x W x D	120 mm / 11.5 mm / 76 mm
Note	

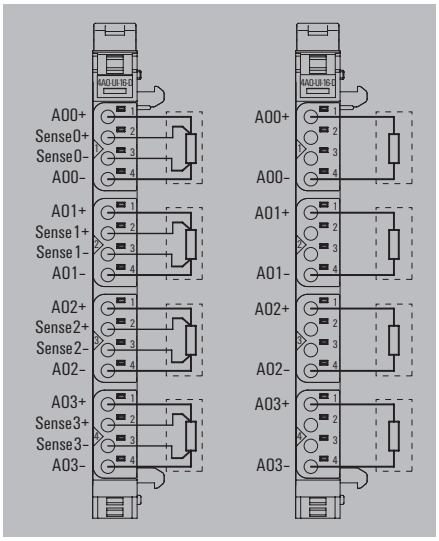

Product standard	IEC 61131-2
EMC	EN 61000
ATEX	EN 60079
UL	UL 61010-2-201
MSIP	
ABS (American Bureau of Shipping)	
BSH (Federal Maritime and Hydrographic Agency of Germany)	
BV (Bureau Veritas)	
DNV GL (Det Norske Veritas) (Germanischer Lloyd)	
LR (Lloyd's Register)	
RINA (Registro Italiano Navale)	

Ordering data

Module variants	Qty.	Order No.
Analogue output module, 4 channels, 16 Bits, diagnosis functions	1	**2453870000**
Note		

Accessories

	Type	Qty.	Order No.
Coding elements	KOSM BHZ5.00	100	**1483050000**
Termination kit	UR20-EBK-ACC	5	**1346610000**
Swivel marker	UR20-SM-ACC	20	**1339920000**
Connection marker for pusher custom printing	PM 2.7/2.6 MC SDR	192	**1323700000**
Connection marker for pusher neutral	PM 2.7/2.6 MC NE WS	960	**1323710000**
Module marker for custom printing	DEK 5/8-11.5 MC SDR	100	**1341610000**
Module marker for neutral	DEK 5/8-11.5 MC NE WS	500	**1341630000**
Thermotransfer version (Material: Polyester)	THM UR20 GE	1	**1429910000**
Thermotransfer version (material: polyester)	THM UR20 WS	1	**1429420000**
Paper version for Laserprinter	ESO UR20 DIN A4 WS	10	**1429430000**
Replacement parts			
Electronic module	UR20-EM-2453870000-SP	1	**2508800000**
Basic module	UR20-BM-SP	5	**1350930000**
Plug-in connector unit	UR20-PK-2453870000-SP	5	**2508780000**
Note	1 roll = 1000 label = 1 Qty. 1 sheet = 60 label = 1 Qty.		

4AO-UI-16-HD

- 4 analogue outputs
- Outputs can be parameterised by channel (voltage, current)
- 16-bit resolution
- 2- and 4-wire connection
- Accuracy typ. 0.05 % FSR
- Replacement values can be set per channel
- Non reactive

UR20-4AO-UI-16-HD

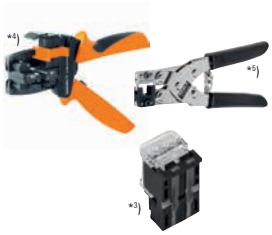

Note: Please order connector separately

Technical data

System data	
Interface	u-remote system bus
Transmission speed of system bus, max.	48 Mbit
Galvanic isolation	500 V DC between the current paths
Supply	
Voltage supply	24 V DC +20 %/ -15 %, via the system bus
Current consumption I_{IN} (power segment of the field bus coupler), typ.	8 mA
Current consumption from I_{OUT} (the respective power segment)	85 mA
Analogue outputs	
Number of analogue outputs	4
Output variable	Voltage (0...5 V, 0...10 V, 1...5 V, 2...10 V, ±10 V, ±5 V), Current (0...20 mA or 4...20 mA)
Response time	1 ms / 4 channels
Resolution	16 Bit
Accuracy	±0,1 % FSR max., 0,05 % FSR typ.
load impedance voltage	> 1 kΩ (at >50 °C ambient temperature, max. total sensor current = 25 mA)
load impedance current	< 600 Ω
Actuator connection	2-wire (current and voltage), 3- and 4-wire (voltage), 2-wire (automatic detection)
Temperature coefficient	20 ppm voltage / 31 ppm current measurement / °K
Max. error between T min. and T max.	220 ppm FSR
Monotonicity	Yes
Cross-talk between the channels	0.000 % FSR
Repeat accuracy	< 1 mV eff.
Module diagnosis	Yes
Individual channel diagnosis	No
Substitute values	Yes
General data	
Weight	72 g
Dimensions H x W x D	120 mm / 11.5 mm / 76 mm
Note	

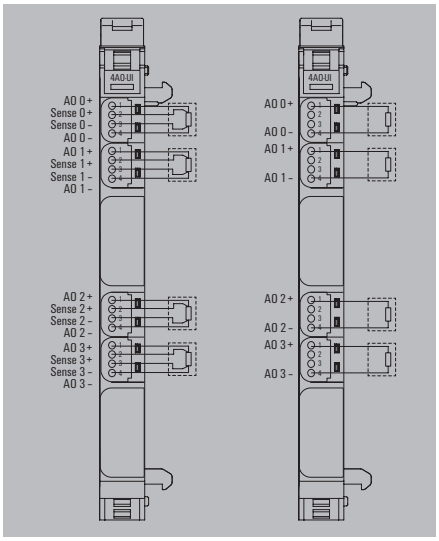

Product standard	IEC 61131-2
EMC	EN 61000
ATEX	EN 60079
UL	UL 61010-2-201
MSIP	MSIP-REM-WMG-1510690000

Ordering data

Module variants	Type	Qty.	Order No.
Analogue output module, 4 channels, 16 Bits, HD-plug	UR20-4AO-UI-16-HD	1	**1510690000**
Note			

Accessories

	Type	Qty.	Order No.
Coding elements	KOSM BHZ5.00	100	**1483050000**
Termination kit	UR20-EBK-ACC	5	**1346610000**
Swivel marker	UR20-SM-ACC	20	**1339920000**
*3) HD plug	UR20-PG0.35	8	**1469340000**
*4) Stripping tool	MULTI-STRIPAX 6-16	1	**9202210000**
*5) Pressing tool	PWZ-UR20-HD	1	**1525820000**
Module marker for custom printing	DEK 5/8-11.5 MC SDR	100	**1341610000**
Module marker for neutral	DEK 5/8-11.5 MC NE WS	500	**1341630000**
Thermotransfer version (Material: Polyester)	THM UR20 GE	1	**1429910000**
Thermotransfer version (material: polyester)	THM UR20 WS	1	**1429420000**
Paper version for Laserprinter	ESO UR20 DIN A4 WS	10	**1429430000**
Replacement parts			
Electronic module	UR20-EM-1510690000-SP	1	**1515470000**
Basic module	UR20-BM-SP	5	**1350930000**
Plug-in connector unit	UR20-PK-1510690000-SP	5	**1531830000**
Note	Note: please order plug (1469340000) separately.		

4AO-UI-16-DIAG-HD

- 4 analogue outputs
- Advanced diagnosis functions
- Outputs can be parameterised by channel (voltage, current)
- 16-bit resolution
- 2- and 4-wire connection
- Accuracy typ. 0.05 % FSR
- Replacement values can be set per channel
- Non reactive

UR20-4AO-UI-16-DIAG-HD

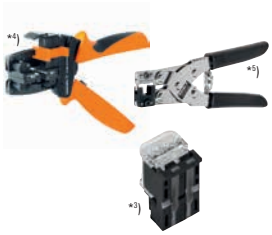

Note: Please order connector separately

Technical data

System data	
Interface	u-remote system bus
Transmission speed of system bus, max.	48 Mbit
Galvanic isolation	500 V DC between the current paths
Supply	
Voltage supply	24 V DC +20 %/ -15 %, via the system bus
Current consumption I_{IN} (power segment of the field bus coupler), typ.	8 mA
Current consumption from I_{OUT} (the respective power segment)	85 mA
Analogue outputs	
Number of analogue outputs	4
Output variable	Voltage (0...5 V, 0...10 V, 1...5 V, 2...10 V, ±10 V, ±5 V), Current (0...20 mA or 4...20 mA)
Response time	1 ms / 4 channels
Resolution	16 Bit
Accuracy	±0,1 % FSR max., 0,05 % FSR typ.
load impedance voltage	> 1 kΩ (at >50 °C ambient temperature, max. total sensor current = 25 mA)
load impedance current	< 600 Ω
Actuator connection	2-wire (current and voltage), 3- and 4-wire (voltage), 2-wire (automatic detection)
Temperature coefficient	20 ppm voltage / 31 ppm current measurement / °K
Max. error between T min. and T max.	220 ppm FSR
Monotonicity	Yes
Cross-talk between the channels	0.000 % FSR
Repeat accuracy	< 1 mV eff.
Module diagnosis	Yes
Individual channel diagnosis	Yes
Substitute values	Yes
General data	
Weight	74 g
Dimensions H x W x D	120 mm / 11.5 mm / 76 mm
Note	

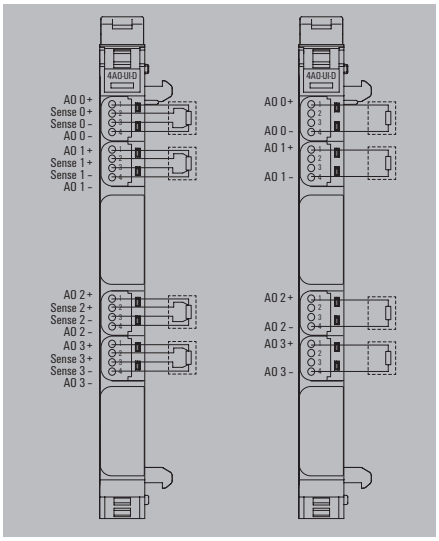

Product standard	IEC 61131-2
EMC	EN 61000
ATEX	EN 60079
UL	UL 61010-2-201
MSIP	MSIP-REM-WMG-1506930000

Ordering data

Module variants	Type	Qty.	Order No.
Analogue output module, 4 channels, diagnosis functions, HD-plug	UR20-4AO-UI-16-DIAG-HD	1	1506930000
Note			

Accessories

	Type	Qty.	Order No.
Coding elements	KOSM BHZ5.00	100	1483050000
Termination kit	UR20-EBK-ACC	5	1346610000
Swivel marker	UR20-SM-ACC	20	1339920000
*3) HD plug	UR20-PG0.35	8	1469340000
*4) Stripping tool	MULTI-STRIPAX 6-16	1	9202210000
*5) Pressing tool	PWZ-UR20-HD	1	1525820000
Module marker for custom printing	DEK 5/8-11.5 MC SDR	100	1341610000
Module marker for neutral	DEK 5/8-11.5 MC NE WS	500	1341630000
Thermotransfer version (Material: Polyester)	THM UR20 GE	1	1429910000
Thermotransfer version (material: polyester)	THM UR20 WS	1	1429420000
Paper version for Laserprinter	ESO UR20 DIN A4 WS	10	1429430000
Replacement parts			
Electronic module	UR20-EM-1506930000-SP	1	1515480000
Basic module	UR20-BM-SP	5	1350930000
Plug-in connector unit	UR20-PK-1506930000-SP	5	1531810000
Note	Note: please order plug (1469340000) separately.		

Digital counter- and communication- modules

100/ 500 kHz; 32-Bit Counter data width; Single channel diagnosis

In automated systems, it is impossible to imagine industry without the collection of incremental- and absolut encoder values. Developed specifically for these applications Weidmüller now offers several counter modules that can take values with an input frequency of up to 500 kHz. By the syncronous-serial Interface module (SSI) high-precision positioning can be realized with absolute encoders. By parameterization the module can work in master- or listening mode to meet all operational situations. For the frequency measurement up to 100 kHz a module with pulse input is available, the UR20-1CNT-500 module has an input that can detect frequencies up to 500 kHz. The UR20-2CNT-100 module has two independent counter inputs and is supplemented by the module UR20-1CNT-100-1DO with only one counter, but additional options. A Latch-, Gate- and Reset input allows external control of the counter. In addition, a digital output can trigger an immediate event, when there are compared values set.

The module UR20-1COM-232-485-422 offers expanded communication possibilities, devices with RS232, RS485 or RS422 interface can be operated efficiently on u-remote. A solution for the connection from the cabinet to the field represents the module UR20-1COM-SAI-PRO. At this gateway up to 15 decentralized IP67 SAI-PRO sub-bus modules can be integrated per u -remote module. Thanks to simplified installation and commissioning, an extended power supply, automatic parameter settings as well as additional diagnostic functions corresponds the new 4-port IO Link Master to the current requirements.

The module electronics supply the connected sensors from the input current path (U_{IN}).

Digital counter modules

UR20-1CNT-100-1DO

UR20-2CNT-100

UR20-1CNT-500

UR20-2FCNT-100

Communication modules

UR20-1SSI

UR20-1COM-232-485-422

UR20-1COM-SAI-PRO

UR20-4COM-IO-LINK

1CNT-100-1DO

- Removable terminals Latch-, Gate- and Reset input
- Counter data width 32-Bit
- Maximum input frequency 100 kHz
- Operation mode impulse, direction, 1-, 2- or 4-times
- Sensor feed
- Input filter adjustable up to 1 ms
- One digital output

UR20-1CNT-100-1DO

Technical data

System data	
Interface	u-remote system bus
Transmission speed of system bus, max.	48 Mbit
Galvanic isolation	500 V DC between the current paths
Supply	
Voltage supply	24 V DC +20 %/ -15 %, via the system bus
Current consumption I_{IN} (power segment of the field bus coupler), typ.	8 mA
Current consumption I_{IN} (the respective power segment)	35 mA (plus output current)
Digital inputs	
Number	1
Input type	for Type 1 and Type 3 sensors as per IEC 61131-2
Input filter	configurable
Input voltage, low	< 5 V
Input voltage, high	> 11 V
Sensor supply	Yes
Sensor connection	2-wire, 3-wire
Reverse polarity protection	Yes
Module diagnosis	Yes
Individual channel diagnosis	Yes
Max. input current per channel	3.5
Counter width	32
Max. input frequency	100 kHz
max. count rate	400 kHz
Latch, gate, reset input	Yes
Mode of operation	Pulse, Direction, 1-, 2-, 4-times
General data	
Weight	85 g
Dimensions H x W x D	120 mm / 11.5 mm / 76 mm
Note	

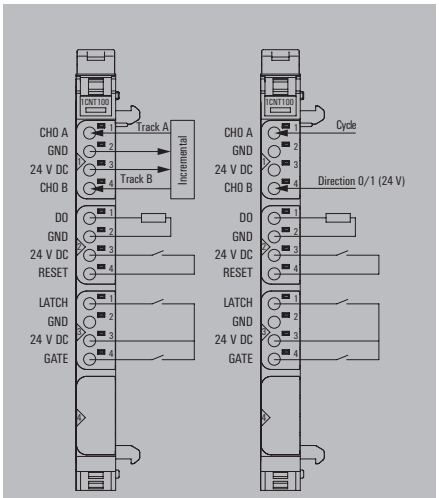

Product standard	IEC 61131-2
EMC	EN 61000
ATEX	EN 60079
UL	UL 61010-2-201
MSIP	MSIP-REM-WMG-1315570000

ABS (American Bureau of Shipping)
BSH (Federal Maritime and Hydrographic Agency of Germany)
BV (Bureau Veritas)
DNV GL (Det Norske Veritas) (Germanischer Lloyd)
LR (Lloyd's Register)
RINA (Registro Italiano Navale)

Ordering data

Module variants	Type	Qty.	Order No.
Digital counter module, 1 channel, 100 kHz	UR20-1CNT-100-1DO	1	1315570000
Note			

Accessories

	Type	Qty.	Order No.
Coding elements	KOSM BHZ5.00	100	1483050000
Termination kit	UR20-EBK-ACC	5	1346610000
Swivel marker	UR20-SM-ACC	20	1339920000
Connection marker for pusher custom printing	PM 2.7/2.6 MC SDR	192	1323700000
Connection marker for pusher neutral	PM 2.7/2.6 MC NE WS	960	1323710000
Module marker for custom printing	DEK 5/8-11.5 MC SDR	100	1341610000
Module marker for neutral	DEK 5/8-11.5 MC NE WS	500	1341630000
Thermotransfer version (Material: Polyester)	THM UR20 GE	1	1429910000
Thermotransfer version (material: polyester)	THM UR20 WS	1	1429420000
Paper version for Laserprinter	ESO UR20 DIN A4 WS	10	1429430000
Replacement parts			
Electronic module	UR20-EM-1315570000-SP	1	1347140000
Basic module	UR20-BM-SP	5	1350930000
Plug-in connector unit	UR20-PK-1315570000-SP	5	1346520000
Note	1 roll = 1000 label = 1 Qty. 1 sheet = 60 label = 1 Qty.		

2CNT-100

- Counter data width 32-Bit
- Maximum input frequency 100 kHz
- Operation mode impulse, direction, 1-, 2- or 4-times
- Sensor feed
- Input filter adjustable up to 1 ms

UR20-2CNT-100

Technical data

System data	
Interface	u-remote system bus
Transmission speed of system bus, max.	48 Mbit
Galvanic isolation	500 V DC between the current paths
Supply	
Voltage supply	24 V DC +20 %/ -15 %, via the system bus
Current consumption I_{IN} (power segment of the field bus coupler), typ.	8 mA
Current consumption I_{IN} (the respective power segment)	35 mA (plus output current)
Digital inputs	
Number	2
Input type	for Type 1 and Type 3 sensors as per IEC 61131-2
Input filter	configurable
Input voltage, low	< 5 V
Input voltage, high	> 11 V
Sensor supply	Yes
Sensor connection	2-wire, 3-wire
Reverse polarity protection	Yes
Module diagnosis	Yes
Individual channel diagnosis	Yes
Max. input current per channel	3.5
Counter width	32
Max. input frequency	100 kHz
max. count rate	400 kHz
Mode of operation	Pulse, Direction, 1-, 2-, 4-times
General data	
Weight	85 g
Dimensions H x W x D	120 mm / 11.5 mm / 76 mm
Note	

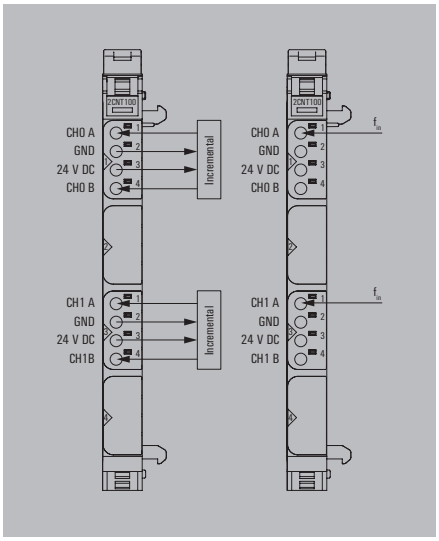

Product standard	IEC 61131-2
EMC	EN 61000
ATEX	EN 60079
UL	UL 61010-2-201
MSIP	MSIP-REM-WMG-1315590000

ABS (American Bureau of Shipping)
BSH (Federal Maritime and Hydrographic Agency of Germany)
BV (Bureau Veritas)
DNV GL (Det Norske Veritas) (Germanischer Lloyd)
LR (Lloyd's Register)
RINA (Registro Italiano Navale)

Ordering data

Module variants	Qty.	Order No.
Digital counter module, 2 channel, 100 kHz		
UR20-2CNT-100	1	**1315590000**
Note		

Accessories

Type	Qty.	Order No.
Coding elements		
KOSM BHZ5.00	100	**1483050000**
Termination kit		
UR20-EBK-ACC	5	**1346610000**
Swivel marker		
UR20-SM-ACC	20	**1339920000**
Connection marker for pusher custom printing		
PM 2.7/2.6 MC SDR	192	**1323700000**
Connection marker for pusher neutral		
PM 2.7/2.6 MC NE WS	960	**1323710000**
Module marker for custom printing		
DEK 5/8-11.5 MC SDR	100	**1341610000**
Module marker for neutral		
DEK 5/8-11.5 MC NE WS	500	**1341630000**
Thermotransfer version (Material: Polyester)		
THM UR20 GE	1	**1429910000**
Thermotransfer version (material: polyester)		
THM UR20 WS	1	**1429420000**
Paper version for Laserprinter		
ESO UR20 DIN A4 WS	10	**1429430000**
Replacement parts		
Electronic module		
UR20-EM-1315590000-SP	1	**1347150000**
Basic module		
UR20-BM-SP	5	**1350930000**
Plug-in connector unit		
UR20-PK-1315590000-SP	5	**1346540000**
Note		
1 roll = 1000 label = 1 Qty. 1 sheet = 60 label = 1 Qty.		

1CNT-500

- Counter data width 32-Bit
- Maximum input frequency 500 kHz
- Operation mode impulse, direction, 1-, 2- or 4-times
- Sensor feed
- Input filter adjustable up to 1 ms
- One digital output

UR20-1CNT-500

Technical data

System data	
Interface	u-remote system bus
Transmission speed of system bus, max.	48 Mbit
Galvanic isolation	500 V DC between the current paths
Supply	
Voltage supply	24 V DC +20 %/ -15 %, via the system bus
Current consumption I_{IN} (power segment of the field bus coupler), typ.	8 mA
Current consumption I_{IN} (the respective power segment)	< 20 mA
Digital inputs	
Number	1
Input filter	configurable
Sensor supply	Yes
Short-circuit-proof	Yes
Module diagnosis	Yes
Individual channel diagnosis	No
Counter width	32 Bit
Max. input frequency	500 kHz
Mode of operation	Pulse, Direction, 1-, 2-, 4-times
General data	
Weight	88 g
Dimensions H x W x D	120 mm / 11.5 mm / 76 mm
Note	

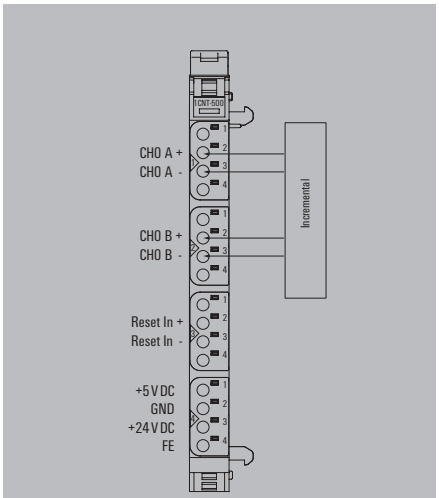

Ordering data

Module variants	Qty.	Order No.
Digital counter module, 1 channel, 500 kHz	1	**1315580000**
Note		

Accessories

Type	Qty.	Order No.
Coding elements	KOSM BHZ5.00	100	**1483050000**
Termination kit	UR20-EBK-ACC	5	**1346610000**
Swievel marker	UR20-SM-ACC	20	**1339920000**
Connection marker for pusher custom printing	PM 2.7/2.6 MC SDR	192	**1323700000**
Connection marker for pusher neutral	PM 2.7/2.6 MC NE WS	960	**1323710000**
Module marker for custom printing	DEK 5/8-11.5 MC SDR	100	**1341610000**
Module marker for neutral	DEK 5/8-11.5 MC NE WS	500	**1341630000**
Thermotransfer version (Material: Polyester)	THM UR20 GE	1	**1429910000**
Thermotransfer version (material: polyester)	THM UR20 WS	1	**1429420000**
Paper version for Laserprinter	ESO UR20 DIN A4 WS	10	**1429430000**
Replacement parts			
Electronic module	UR20-EM-1315580000-SP	1	**1347170000**
Basic module	UR20-BM-SP	5	**1350930000**
Plug-in connector unit	UR20-PK-1315580000-SP	5	**1346530000**
Note	1 roll = 1000 label = 1 Qty. 1 sheet = 60 label = 1 Qty.		

Product standard	IEC 61131-2
EMC	EN 61000
ATEX	EN 60079
UL	UL 61010-2-201
MSIP	MSIP-REM-WMG-1315580000
ABS (American Bureau of Shipping)	
BSH (Federal Maritime and Hydrographic Agency of Germany)	
BV (Bureau Veritas)	
DNV GL (Det Norske Veritas) (Germanischer Lloyd)	
LR (Lloyd's Register)	
RINA (Registro Italiano Navale)	

2FCNT-100

- Counter data width 32-Bit
- Maximum input frequency 100 kHz
- Operation mode impulse
- Sensor feed
- Input filter adjustable up to 1 ms

UR20-2FCNT-100

Technical data

System data	
Interface	u-remote system bus
Transmission speed of system bus, max.	48 Mbit
Galvanic isolation	500 V DC between the current paths
Supply	
Voltage supply	24 V DC +20 %/ -15 %, via the system bus
Current consumption I_{IN} (power segment of the field bus coupler), typ.	8 mA
Current consumption I_{IN} (the respective power segment)	35 mA (plus output current)
Digital inputs	
Number	2
Input filter	configurable
Input voltage, low	< 5 V
Input voltage, high	> 11 V
Sensor supply	Yes
Sensor connection	2-wire, 3-wire
Reverse polarity protection	Yes
Module diagnosis	Yes
Individual channel diagnosis	No
Max. input current per channel	3.5 mA
Counter width	32 Bit
Max. input frequency	100 kHz
Mode of operation	Pulse
General data	
Weight	65 g
Dimensions H x W x D	120 mm / 11.5 mm / 76 mm
Note	

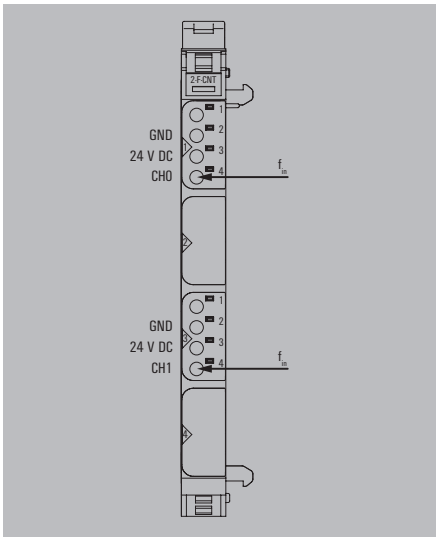

Product standard	IEC 61131-2
EMC	EN 61000
ATEX	EN 60079
UL	UL 61010-2-201
MSIP	MSIP-REM-WMG-1508080000
ABS (American Bureau of Shipping)	
BSH (Federal Maritime and Hydrographic Agency of Germany)	
BV (Bureau Veritas)	
DNV GL (Det Norske Veritas) (Germanischer Lloyd)	
LR (Lloyd's Register)	
RINA (Registro Italiano Navale)	

Ordering data

Module variants	Type	Qty.	Order No.
Digital frequency counter module, 2 channel, 100 kHz	UR20-2FCNT-100	1	1508080000
Note			

Accessories

	Type	Qty.	Order No.
Coding elements	KOSM BHZ5.00	100	1483050000
Termination kit	UR20-EBK-ACC	5	1346610000
Swievel marker	UR20-SM-ACC	20	1339920000
Connection marker for pusher custom printing	PM 2.7/2.6 MC SDR	192	1323700000
Connection marker for pusher neutral	PM 2.7/2.6 MC NE WS	960	1323710000
Module marker for custom printing	DEK 5/8-11.5 MC SDR	100	1341610000
Module marker for neutral	DEK 5/8-11.5 MC NE WS	500	1341630000
Thermotransfer version (Material: Polyester)	THM UR20 GE	1	1429910000
Thermotransfer version (material: polyester)	THM UR20 WS	1	1429420000
Paper version for Laserprinter	ESO UR20 DIN A4 WS	10	1429430000
Replacement parts			
Electronic module	UR20-EM-1508080000-SP	1	1515440000
Basic module	UR20-BM-SP	5	1350930000
Plug-in connector unit	UR20-PK-1508080000-SP	5	1518840000
Note	1 roll = 1000 label = 1 Qty. 1 sheet = 60 label = 1 Qty.		

1SSI

- Parameterised transfer rate
- Listening- or Master-Mode
- Data width 8 ... 32 bits
- Adjustable delay time

UR20-1SSI

Technical data

System data	
Interface	u-remote system bus
Transmission speed of system bus, max.	48 Mbit
Galvanic isolation	500 V DC between the current paths
Supply	
Voltage supply	24 V DC +20 %/ -15 %, via the system bus
Current consumption I_{IN} (power segment of the field bus coupler), typ.	8 mA
Current consumption from I_{OUT} (the respective power segment)	25 mA + sensor feed
Serial inputs	
Number	1
Data format	Binary, Gray-Code
SSI mode	Listening, Master
Sensor supply	Yes
Reverse polarity protection	Yes
Module diagnosis	Yes
Individual channel diagnosis	No
Cable length	max. 320 m at 125 kHz
General data	
Weight	87 g
Dimensions H x W x D	120 mm / 11.5 mm / 76 mm
Note	

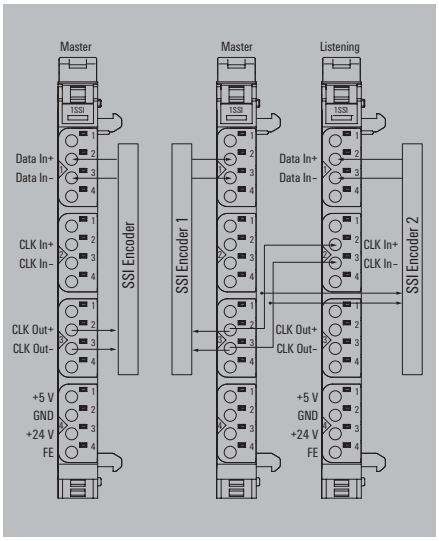

Ordering data

Module variants	Type	Qty.	Order No.
SSI Module 1 channel, 8 - 32 Bit	UR20-1SSI	1	1508090000
Note			

Accessories

	Type	Qty.	Order No.
Coding elements	KOSM BHZ5.00	100	1483050000
Termination kit	UR20-EBK-ACC	5	1346610000
Swievel marker	UR20-SM-ACC	20	1339920000
Connection marker for pusher custom printing	PM 2.7/2.6 MC SDR	192	1323700000
Connection marker for pusher neutral	PM 2.7/2.6 MC NE WS	960	1323710000
Module marker for custom printing	DEK 5/8-11.5 MC SDR	100	1341610000
Module marker for neutral	DEK 5/8-11.5 MC NE WS	500	1341630000
Thermotransfer version (Material: Polyester)	THM UR20 GE	1	1429910000
Thermotransfer version (material: polyester)	THM UR20 WS	1	1429420000
Paper version for Laserprinter	ESO UR20 DIN A4 WS	10	1429430000
Replacement parts			
Electronic module	UR20-EM-1508090000-SP	1	1515490000
Basic module	UR20-BM-SP	5	1350930000
Plug-in connector unit	UR20-PK-1508090000-SP	5	1559870000
Note	1 roll = 1000 label = 1 Qty. 1 sheet = 60 label = 1 Qty.		

Product standard	IEC 61131-2
EMC	EN 61000
ATEX	EN 60079
UL	UL 61010-2-201
MSIP	MSIP-REM-WMG-1508090000

ABS (American Bureau of Shipping)
BSH (Federal Maritime and Hydrographic Agency of Germany)
BV (Bureau Veritas)
DNV GL (Det Norske Veritas) (Germanischer Lloyd)
LR (Lloyd's Register)
RINA (Registro Italiano Navale)

1COM-232-485-422

- Interface for RS232, RS485 and RS422 peripherals
- Adjustable transfer rate
- Galvanic isolation of the signals in the module
- Separate power supply for external peripheral to the module

UR20-1COM-232-485-422

Technical data

System data	
Interface	u-remote system bus
Transmission speed of system bus, max.	48 Mbit
Galvanic isolation	500 V DC between the current paths
Supply	
Voltage supply	24 V DC +20 %/ -15 %, via the system bus
Current consumption I_{IN} (power segment of the field bus coupler), typ.	8 mA
Current consumption I_{IN} (the respective power segment)	50 mA + load
RS interface	
Number	1
Connection type	1x RS232 / 1x RS485/422
Transmission rate	configurable, 300 - 115200 Bit/s
Voltage supply	24 V DC +20 %/ -15 %, via the system bus
Output current, supply voltage	0.5 A
Standards RS232	DIN 66020, DIN 66259, EIA-RS 232C, CCITT V.24/V.28
Standards RS485/422	DIN 66259 Part 1 und 3, EIA-RS 422/485, CCITT V.11
Short-circuit-proof	Yes
Module diagnosis	Yes
Individual channel diagnosis	Yes
General data	
Weight	87 g
Dimensions H x W x D	120 mm / 11.5 mm / 76 mm
Note	

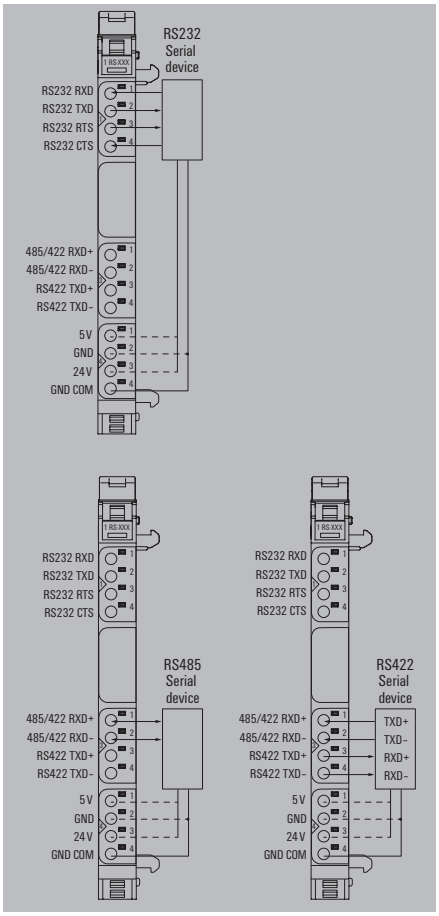

Ordering data

Module variants	Qty.	Order No.
RS232/RS485/RS422 communication module	1	1315750000
Note		

Accessories

	Qty.	Order No.
Coding elements	100	1483050000
Termination kit	5	1346610000
Swivel marker	20	1339920000
Connection marker for pusher custom printing	192	1323700000
Connection marker for pusher neutral	960	1323710000
Module marker for custom printing	100	1341610000
Module marker for neutral	500	1341630000
Thermotransfer version (Material: Polyester)	1	1429910000
Thermotransfer version (material: polyester)	1	1429420000
Paper version for Laserprinter	10	1429430000
Replacement parts		
Electronic module	1	1347350000
Basic module	5	1350930000
Plug-in connector unit	5	2425150000
Note		

Product standard	IEC 61131-2
EMC	EN 61000
ATEX	EN 60079
UL	UL 61010-2-201
MSIP	MSIP-REM-WMG-1315750000

ABS (American Bureau of Shipping)
BSH (Federal Maritime and Hydrographic Agency of Germany)
BV (Bureau Veritas)
DNV GL (Det Norske Veritas) (Germanischer Lloyd)
LR (Lloyd's Register)
RINA (Registro Italiano Navale)

1COM-SAI-PRO

- 15 SAI-PRO modules connectable
- Max. 50 m Subbus wire length
- Continuous diagnostics IP20-IP67
- Representation of SAI-PRO modules in web server

UR20-1COM-SAI-PRO

Technical data

System data	
Interface	u-remote system bus
Transmission speed of system bus, max.	48 Mbit
Galvanic isolation	500 V DC between the current paths
Supply	
Voltage supply	24 V DC +20 %/ -15 %, via the system bus
Current consumption I_{IN} (power segment of the field bus coupler), typ.	8 mA
Current consumption I_{IN} (the respective power segment)	20 mA + SAI supply current
IP67 interface	
Number	1
Transmission rate	max. 500 kBit/s (automatic detection), configurable
Voltage supply	24 V DC +20 %/ -15 %, via the system bus
Output current, supply voltage	2.5 A
Short-circuit-proof	Yes
Module diagnosis	Yes
Individual channel diagnosis	Yes
General data	
Weight	81 g
Dimensions H x W x D	120 mm / 11.5 mm / 76 mm
Note	

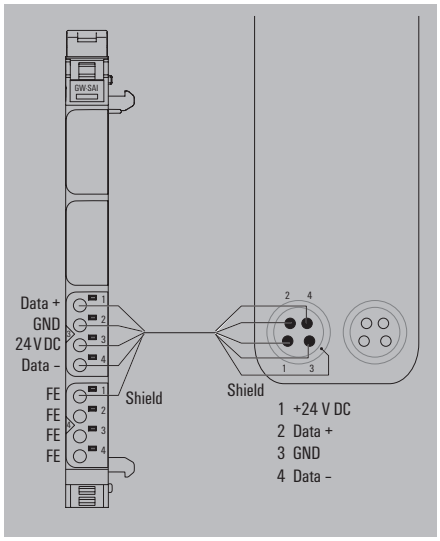

Ordering data

Module variants	Type	Qty.	Order No.
IP20-IP67 communication module	UR20-1COM-SAI-PRO	1	**2007430000**
Note			

Accessories

	Type	Qty.	Order No.
Coding elements	KOSM BHZ5.00	100	**1483050000**
Termination kit	UR20-EBK-ACC	5	**1346610000**
Swievel marker	UR20-SM-ACC	20	**1339920000**
Connection marker for pusher custom printing	PM 2.7/2.6 MC SDR	192	**1323700000**
Connection marker for pusher neutral	PM 2.7/2.6 MC NE WS	960	**1323710000**
Module marker for custom printing	DEK 5/8-11.5 MC SDR	100	**1341610000**
Module marker for neutral	DEK 5/8-11.5 MC NE WS	500	**1341630000**
Thermotransfer version (Material: Polyester)	THM UR20 GE	1	**1429910000**
Thermotransfer version (material: polyester)	THM UR20 WS	1	**1429420000**
Paper version for Laserprinter	ESO UR20 DIN A4 WS	10	**1429430000**
Replacement parts			
Electronic module	UR20-EM-200743000-SP	1	**2425350000**
Basic module	UR20-BM-SP	5	**1350930000**
Plug-in connector unit	UR20-PK-2007430000-SP	5	**2425160000**
Note	1 roll = 1000 label = 1 Qty. 1 sheet = 60 label = 1 Qty.		

Product standard	IEC 61131-2
EMC	EN 61000
ATEX	EN 60079
UL	UL 61010-2-201
MSIP	MSIP-REM-WMG-2007430000

4COM-IO-LINK

- Connection for 4 IO-Link devices
- IO-Link standard according to IEC 61131-9
- Protocol support IO-Link v.1.0 and v.1.1
- Max. 20 m wire length
- Internal data width 4-32 bytes, configurable

UR20-4COM-IO-LINK

Technical data

System data	
Interface	u-remote system bus
Transmission speed of system bus, max.	48 Mbit
Galvanic isolation	500 V DC between the current paths
Supply	
Voltage supply	24 V DC +20 %/ -15 %, via the system bus
Current consumption I_{IN} (power segment of the field bus coupler), typ.	8 mA
Current consumption I_{IN} (the respective power segment)	25 mA + sensor feed
IO-Link interface	
Number	4
Connection type	IO-Link
Output current	0.1 A C/Q (DO MODE), 0.5 A L+
IO link standard	IEC 61131-9
Short-circuit-proof	Yes
Module diagnosis	Yes
Individual channel diagnosis	Yes
Class	A
Digital inputs	
Number	4
Type	Types 1 and 3, EN 61131-2
Input voltage, low	< 5 V
Input voltage, high	> 11 V
General data	
Weight	88 g
Dimensions H x W x D	120 / 11.5 / 76 mm
Note	

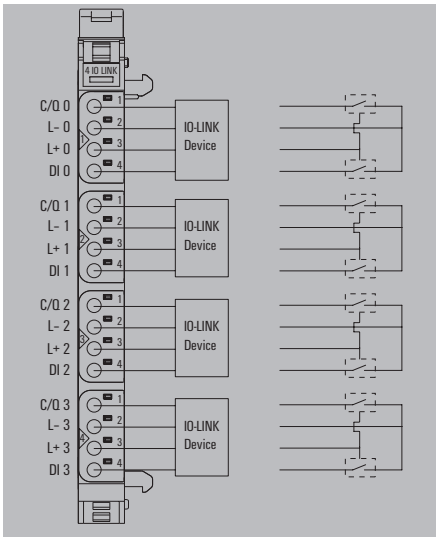

Product standard	IEC 61131-2
EMC	EN 61000
ATEX	EN 60079
UL	UL 61010-2-201
MSIP	

Ordering data

Module variants	Type	Qty.	Order No.
Digital communication module, 4 channels	UR20-4COM-IO-LINK	1	1315740000
Note			

Accessories

	Type	Qty.	Order No.
Coding elements	KOSM BHZ5.00	100	1483050000
Termination kit	UR20-EBK-ACC	5	1346610000
Swievel marker	UR20-SM-ACC	20	1339920000
Connection marker for pusher custom printing	PM 2.7/2.6 MC SDR	192	1323700000
Connection marker for pusher neutral	PM 2.7/2.6 MC NE WS	960	1323710000
Module marker for custom printing	DEK 5/8-11.5 MC SDR	100	1341610000
Module marker for neutral	DEK 5/8-11.5 MC NE WS	500	1341630000
Thermotransfer version (Material: Polyester)	THM UR20 GE	1	1429910000
Thermotransfer version (material: polyester)	THM UR20 WS	1	1429420000
Paper version for Laserprinter	ESO UR20 DIN A4 WS	10	1429430000
Replacement parts			
Electronic module	UR20-EM-1315740000-SP	1	1347340000
Basic module	UR20-BM-SP	5	1350930000
Plug-in connector unit	UR20-PK-1315740000-SP	5	2508760000
Note	1 roll = 1000 label = 1 Qty. 1 sheet = 60 label = 1 Qty.		

Safe I/O modules and safe power-feed modules

PROFIsafe/FSoE; PLe, Kat. 4/SIL 3; OSSD-output; wire breakage and short-circuit detection

Safety technology is of central importance in the automation industry and machine construction. When attempting to reduce risks and avoid putting people and the environment in danger, you need solutions which satisfy stringent requirements and statutory specifications.

Weidmüller PROFIsafe and Fail-Safe-over-EtherCAT modules (IEC 61784-3 respectively IEC 61784-3-3) are providing variable parameterization possibilities and because of this a very high flexibility and adaptability to your application. Due to the standards a use in existing systems is straightforward. The safe I/O-modules with PROFIsafe or FSoE are available with digital in- and outputs.

The safe power-feed modules of the u-remote system have key features such as emergency stop circuits and wire breakage/ short-circuit detection. They satisfy all SIL 3 requirements according to IEC 62061 and EN ISO 13849-1, Category 4, PL e and support the safe operation of your system.

By safely shutting down the downstream output modules, the safety modules attain maximum safety with optimum control. All input sensors are independently supplied via separate voltage paths and report the current machine status to the control unit. The restart is either performed in manual mode or using the autostart function.

Safe I/O- and safe power-feed modules from Weidmüller also cut maintenance and service times and improve your response times in an emergency – thanks to a concept of maximum transparency, e.g. using OSSD output.

The module electronics supply the connected actuators from the output current path (U_{OUT}).

UR20-4DI-4DO-PN-FSPS-V2

UR20-8DI-PN-FSPS-V2

UR20-4DI-4DO-PN-FSOE-V2

UR20-8DI-PN-FSOE-V2

UR20-PF-O-1DI-SIL

UR20-PF-O-2DI-DELAY-SIL

UR20-PF-O-2DI-SIL

4DI-4DO-PN-FSOE-V2

- FailSafe over EtherCAT
- 4 digital inputs, two of them are parametrisable P- or N-switching
- 4 digital outputs, two of them are parametrisable P- or N-switching
- Constant current with thermal switch-off

UR20-4DI-4DO-PN-FSOE-V2

Technical data

System data	
Interface	u-remote system bus
Transmission speed of system bus, max.	48 Mbit
Galvanic isolation	500 V DC between the current paths
Supply	
Voltage supply	24 V DC +20 %/ -15 %, via the system bus
Current consumption I_{IN} (power segment of the field bus coupler), typ.	8 mA
Current consumption from I_{OUT} (the respective power segment)	30 mA
Safety related data	
Achievable safety level, inputs / outputs	SIL 3 (IEC 61508), SILCL 3 (IEC 62061), Ple, category 4 (DIN EN ISO 13849-1) / architecture 1oo2 (2 channels)
Level of diagnostic coverage DC_{AVG} (IEC 62061)	Input: 0.921, output: 0.969
Level of diagnostic coverage (DIN EN ISO 13849)	Input, single-channel wiring: 90%; dual-channel wiring: 99%
MTTFd (mean time to dangerous failure), inputs	> 100 years (840 years)
MTTFd (mean time to dangerous failure), outputs	> 100 years (279 years)
PFH (probability of failure per hour in 1/h), inputs	Single-channel circuit 1oo1: 10-8, Dual-channel circuit 1oo2: 2,17*10-10
Proportion of safety-related outages (SFF)	98 %
HFT (hardware fault tolerance), inputs	Single-channel circuit 1oo1: 0
HFT (hardware fault tolerance), outputs	1
Inputs	
Number	4
Input filter	configurable
Input voltage, low / high	< 5 V / > 11 V
Reverse polarity protection	Yes
Outputs	
Number	4
Output current per channel, max. / Output current per module, max.	0.5 A / 2 A
Actuator connection	2-wire
Short-circuit-proof	Yes
Response time of the protective circuit (current limiting)	< 100µs
General data	
Weight	90 g
Dimensions H x W x D	120 mm / 11.5 mm / 76 mm
Note	

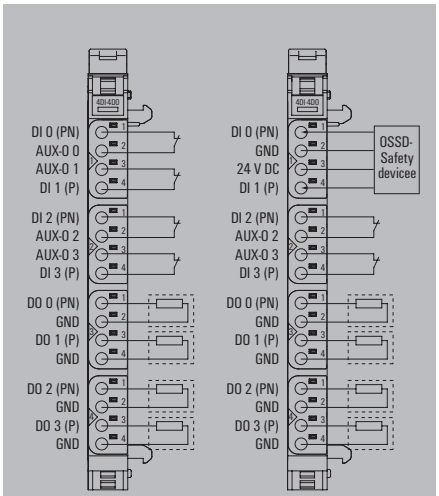

Product standard	IEC 61131-2
EMC	EN 61000
ATEX	EN 60079
UL	UL 61010-2-201
MSIP	

Ordering data

Module variants	Type	Qty.	Order No.
Safety module FSOE, 4 digital inputs/outputs	UR20-4DI-4DO-PN-FSOE-V2	1	2464580000
Note	For this and additional technical data, please refer to the manual available at www.weidmueller.de..		

Accessories

	Type	Qty.	Order No.
Coding elements	KOSM BHZ5.00	100	1483050000
Termination kit	UR20-EBK-ACC	5	1346610000
Swievel marker	UR20-SM-ACC	20	1339920000
Connection marker for pusher custom printing	PM 2.7/2.6 MC SDR	192	1323700000
Connection marker for pusher neutral	PM 2.7/2.6 MC NE WS	960	1323710000
Module marker for custom printing	DEK 5/8-11.5 MC SDR	100	1341610000
Module marker for neutral	DEK 5/8-11.5 MC NE WS	500	1341630000
Thermotransfer version (Material: Polyester)	THM UR20 GE	1	1429910000
Thermotransfer version (material: polyester)	THM UR20 WS	1	1429420000
Paper version for Laserprinter	ESO UR20 DIN A4 WS	10	1429430000
Replacement parts			
Electronic module	UR20-EM-2464580000-SP	5	2466020000
Basic module	UR20-BM-SP	5	1350930000
Plug-in connector unit	UR20-PK-2464580000-SP	1	2465990000
Note	1 roll = 1000 label = 1 Qty. 1 sheet = 60 label = 1 Qty.		

8DI-PN-FSOE-V2

- FailSafe over EtherCAT
- 8 digital inputs, four of them are parametrisable P- or N-switching
- 2-wire, 3-wire, 4-wire connection

UR20-8DI-PN-FSOE-V2

Technical data

System data	
Interface	u-remote system bus
Transmission speed of system bus, max.	48 Mbit
Galvanic isolation	500 V DC between the current paths
Safety related data	
Achievable safety level, inputs / Achievable safety level, inputs	SILCL 2 (IEC 62061), SILCL 3 (IEC 62061) / PLd, category 2 (DIN EN ISO 13849-1) / architecture 1oo1 (1 channel), Ple, category 4 (DIN EN ISO 13849-1) / architecture 1oo2 (2 channels)
MTTFd (mean time to dangerous failure), inputs	> 100 years (840 years)
PFH (probability of failure per hour in 1/h), inputs	Single-channel circuit 1oo1: 10-8, Dual-channel circuit 1oo2: 2,17*10-10
Proportion of safety-related outages (SFF)	98 %
Supply	
Voltage supply	24 V DC +20 %/ -15 %, via the system bus
Current consumption I_{IN} (power segment of the field bus coupler), typ.	8 mA
Current consumption from I_{OUT} (the respective power segment)	30 mA
Inputs	
Number	8
Input type	Type 1 in acc. with IEC 61131-2, Type 3 in acc. with IEC 61131-2
Input filter	configurable
Input voltage, low	< 5 V
Input voltage, high	> 11 V
Sensor supply	Yes
Sensor connection	2-wire, 3-wire, 4-wire
Reverse polarity protection	Yes
Module diagnosis	Yes
Individual channel diagnosis	Yes
General data	
Weight	90 g
Dimensions H x W x D	120 mm / 11.5 mm / 76 mm
Note	

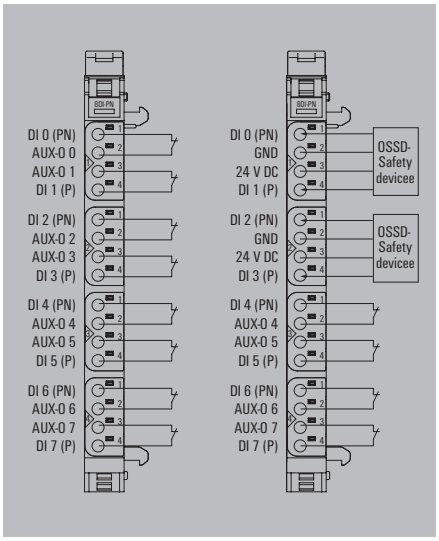

Product standard	IEC 61131-2
EMC	EN 61000
ATEX	EN 60079
UL	UL 61010-2-201
MSIP	

Ordering data

Module variants	Type	Qty.	Order No.
Safety module FSOE, 8 digital inputs	UR20-8DI-PN-FSOE-V2	1	**2464600000**
Note	For this and additional technical data, please refer to the manual available at www.weidmueller.de..		

Accessories

	Type	Qty.	Order No.
Coding elements	KOSM BHZ5.00	100	**1483050000**
Termination kit	UR20-EBK-ACC	5	**1346610000**
Swievel marker	UR20-SM-ACC	20	**1339920000**
Connection marker for pusher custom printing	PM 2.7/2.6 MC SDR	192	**1323700000**
Connection marker for pusher neutral	PM 2.7/2.6 MC NE WS	960	**1323710000**
Module marker for custom printing	DEK 5/8-11.5 MC SDR	100	**1341610000**
Module marker for neutral	DEK 5/8-11.5 MC NE WS	500	**1341630000**
Thermotransfer version (Material: Polyester)	THM UR20 GE	1	**1429910000**
Thermotransfer version (material: polyester)	THM UR20 WS	1	**1429420000**
Paper version for Laserprinter	ESO UR20 DIN A4 WS	10	**1429430000**
Replacement parts			
Electronic module	UR20-EM-2464600000-SP	5	**2465960000**
Basic module	UR20-BM-SP	5	**1350930000**
Plug-in connector unit	UR20-PK-2464600000-SP	1	**2465940000**
Note	1 roll = 1000 label = 1 Qty. 1 sheet = 60 label = 1 Qty.		

4DI-4DO-PN-FSPS-V2

- PROFIsafe
- 4 digital inputs, two of them are parametrisable P- or N-switching
- 4 digital outputs, two of them are parametrisable P- or N-switching
- Constant current with thermal switch-off

UR20-4DI-4DO-PN-FSPS-V2

Technical data

System data	
Interface	u-remote system bus
Transmission speed of system bus, max.	48 Mbit
Galvanic isolation	500 V DC between the current paths
Safety related data	
Achievable safety level, inputs / outputs	SIL 3 (IEC 61508), SILCL 3 (IEC 62061), Ple, category 4 (DIN EN ISO 13849-1) / architecture 1oo2 (2 channels)
Level of diagnostic coverage DC_{AVG} (IEC 62061)	Input: 0.921, output: 0.969
Level of diagnostic coverage (DIN EN ISO 13849)	Input, single-channel wiring: 90%; dual-channel wiring: 99%
MTTFd (mean time to dangerous failure), inputs	> 100 years (840 years)
MTTFd (mean time to dangerous failure), outputs	> 100 years (279 years)
PFH (probability of failure per hour in 1/h), inputs	Single-channel circuit 1oo1: 10-8, Dual-channel circuit 1oo2: 2,17*10-10
Proportion of safety-related outages (SFF)	98 %
HFT (hardware fault tolerance), inputs	Single-channel circuit 1oo1: 0
HFT (hardware fault tolerance), outputs	1
Supply	
Voltage supply	24 V DC +20 %/ -15 %, via the system bus
Current consumption I_{IN} (power segment of the field bus coupler), typ.	8 mA
Current consumption from I_{OUT} (the respective power segment)	30 mA
Inputs	
Number	4
Input filter	configurable
Input voltage, low / high	< 5 V / > 11 V
Reverse polarity protection	Yes
Outputs	
Number	4
Output current per channel, max. / Output current per module, max.	0.5 A / 2 A
Actuator connection	2-wire
Short-circuit-proof	Yes
Response time of the protective circuit (current limiting)	< 100µs
General data	
Weight	90 g
Dimensions H x W x D	120 mm / 11.5 mm / 76 mm
Note	

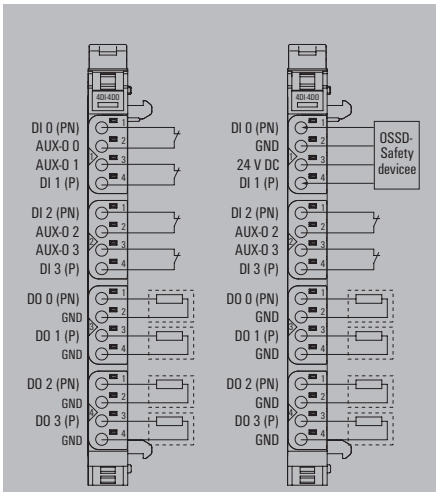

Product standard	IEC 61131-2
EMC	EN 61000
ATEX	EN 60079
UL	UL 61010-2-201
MSIP	

Ordering data

Module variants	Type	Qty.	Order No.
Safety module PROFIsafe, 4 digital inputs/outputs	UR20-4DI-4DO-PN-FSPS-V2	1	2464570000
Note	For this and additional technical data, please refer to the manual available at www.weidmueller.de..		

Accessories

	Type	Qty.	Order No.
Coding elements	KOSM BHZ5.00	100	1483050000
Termination kit	UR20-EBK-ACC	5	1346610000
Swivel marker	UR20-SM-ACC	20	1339920000
Connection marker for pusher custom printing	PM 2.7/2.6 MC SDR	192	1323700000
Connection marker for pusher neutral	PM 2.7/2.6 MC NE WS	960	1323710000
Module marker for custom printing	DEK 5/8-11.5 MC SDR	100	1341610000
Module marker for neutral	DEK 5/8-11.5 MC NE WS	500	1341630000
Thermotransfer version (Material: Polyester)	THM UR20 GE	1	1429910000
Thermotransfer version (material: polyester)	THM UR20 WS	1	1429420000
Paper version for Laserprinter	ESO UR20 DIN A4 WS	10	1429430000
Replacement parts			
Electronic module	UR20-EM-2464570000-SP	1	2466030000
Basic module	UR20-BM-SP	5	1350930000
Plug-in connector unit	UR20-PK-2464570000-SP	5	2466000000
Note	1 roll = 1000 label = 1 Qty. 1 sheet = 60 label = 1 Qty.		

8DI-PN-FSPS-V2

- PROFIsafe
- 8 digital inputs, four of them are parametrisable P- or N-switching
- 2-wire, 3-wire, 4-wire connection

UR20-8DI-PN-FSPS-V2

Technical data

System data	
Interface	u-remote system bus
Transmission speed of system bus, max.	48 Mbit
Galvanic isolation	500 V DC between the current paths
Safety related data	
Achievable safety level, inputs / Achievable safety level, inputs	SILCL 2 (IEC 62061), SILCL 3 (IEC 62061) / PLd, category 2 (DIN EN ISO 13849-1) / architecture 1oo1 (1 channel), Ple, category 4 (DIN EN ISO 13849-1) / architecture 1oo2 (2 channels)
MTTFd (mean time to dangerous failure), inputs	> 100 years (840 years)
PFH (probability of failure per hour in 1/h), inputs	Single-channel circuit 1oo1: 10-8, Dual-channel circuit 1oo2: 2,17*10-10
Proportion of safety-related outages (SFF)	98 %
Supply	
Voltage supply	24 V DC +20 %/ -15 %, via the system bus
Current consumption I_{IN} (power segment of the field bus coupler), typ.	8 mA
Current consumption from I_{OUT} (the respective power segment)	30 mA
Inputs	
Number	8
Input type	Type 1 in acc. with IEC 61131-2, Type 3 in acc. with IEC 61131-2
Input filter	configurable
Input voltage, low	< 5 V
Input voltage, high	> 11 V
Sensor supply	Yes
Sensor connection	2-wire, 3-wire, 4-wire
Reverse polarity protection	Yes
Module diagnosis	Yes
Individual channel diagnosis	Yes
General data	
Weight	89 g
Dimensions H x W x D	120 mm / 11.5 mm / 76 mm
Note	

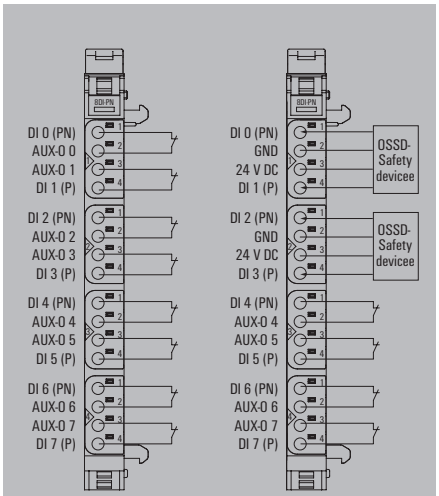

Product standard	IEC 61131-2
EMC	EN 61000
ATEX	EN 60079
UL	UL 61010-2-201
MSIP	

Ordering data

Module variants	Type	Qty.	Order No.
Safety module PROFIsafe, 8 digital inputs	UR20-8DI-PN-FSPS-V2	1	2464590000
Note	For this and additional technical data, please refer to the manual available at www.weidmueller.de..		

Accessories

	Type	Qty.	Order No.
Coding elements	KOSM BHZ5.00	100	1483050000
Termination kit	UR20-EBK-ACC	5	1346610000
Swievel marker	UR20-SM-ACC	20	1339920000
Connection marker for pusher custom printing	PM 2.7/2.6 MC SDR	192	1323700000
Connection marker for pusher neutral	PM 2.7/2.6 MC NE WS	960	1323710000
Module marker for custom printing	DEK 5/8-11.5 MC SDR	100	1341610000
Module marker for neutral	DEK 5/8-11.5 MC NE WS	500	1341630000
Thermotransfer version (Material: Polyester)	THM UR20 GE	1	1429910000
Thermotransfer version (material: polyester)	THM UR20 WS	1	1429420000
Paper version for Laserprinter	ESO UR20 DIN A4 WS	10	1429430000
Replacement parts			
Electronic module	UR20-EM-2464590000-SP	1	2466010000
Basic module	UR20-BM-SP	5	1350930000
Plug-in connector unit	UR20-PK-2464590000-SP	5	2465950000
Note	1 roll = 1000 label = 1 Qty. 1 sheet = 60 label = 1 Qty.		

PF-O-1DI-SIL

- SIL 3 safety standard in accordance with IEC 62061 and DIN EN ISO 13849-1, category 4, PL e
- Connection for an emergency stop circuit
- OSSD output reports status to control unit
- Pulsed input circuit for wire breakage and short-circuit detection
- Restart: manual or using autostart

UR20-PF-O-1DI-SIL

Technical data

System data	
Interface	u-remote system bus
Transmission speed of system bus, max.	48 Mbit
Safety related data	
Achievable safety level, inputs	SIL 3 (IEC 61508)
Proportion of safety-related outages (SFF)	98 %
HFT (hardware fault tolerance), inputs	1
Supply	
Supply voltage for inputs	24 V DC +20 %/ -15 %
Supply voltage for outputs	24 V DC +20 %/ -15 %
Feed current for I_{OUT} (output current path) , max.	8050 mA
Current consumption I_{IN} (power segment of the field bus coupler), typ.	8 mA
Digital inputs	
Wire break detection	Yes
Short-circuit detection	Yes
General data	
Weight	109 g
Dimensions H x W x D	120 mm / 11.5 mm / 76 mm
Note	

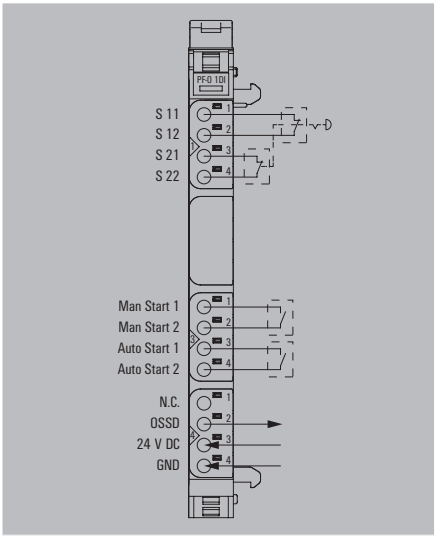

Product standard	IEC 61131-2
EMC	EN 61000
ATEX	EN 60079
UL	UL 61010-2-201
MSIP	MSIP-REM-WMG-1335030000

Ordering data

Module variants	Type	Qty.	Order No.
Safety module, 1 digital input	UR20-PF-O-1DI-SIL	1	**1335030000**
Note			

Accessories

	Type	Qty.	Order No.
Coding elements	KOSM BHZ5.00	100	**1483050000**
Termination kit	UR20-EBK-ACC	5	**1346610000**
Swivel marker	UR20-SM-ACC	20	**1339920000**
Connection marker for pusher custom printing	PM 2.7/2.6 MC SDR	192	**1323700000**
Connection marker for pusher neutral	PM 2.7/2.6 MC NE WS	960	**1323710000**
Module marker for custom printing	DEK 5/8-11.5 MC SDR	100	**1341610000**
Module marker for neutral	DEK 5/8-11.5 MC NE WS	500	**1341630000**
Thermotransfer version (Material: Polyester)	THM UR20 GE	1	**1429910000**
Thermotransfer version (material: polyester)	THM UR20 WS	1	**1429420000**
Paper version for Laserprinter	ESO UR20 DIN A4 WS	10	**1429430000**
Replacement parts			
Electronic module	UR20-EM-1335030000-SP	1	**1347520000**
Basic module	UR20-BM-PF-O-SIL-SP	5	**1350970000**
Plug-in connector unit	UR20-PK-1335030000-SP	5	**1346560000**
Note	1 roll = 1000 label = 1 Qty. 1 sheet = 60 label = 1 Qty.		

PF-O-2DI-SIL

- SIL 3 safety standard in accordance with IEC 62061 and DIN EN ISO 13849-1, category 4, PL e
- Connection for an emergency stop circuit
- OSSD output reports status to control unit
- Pulsed input circuit for wire breakage and short-circuit detection
- Restart: manual or using autostart

UR20-PF-O-2DI-SIL

Technical data

System data	
Interface	u-remote system bus
Transmission speed of system bus, max.	48 Mbit
Safety related data	
Achievable safety level, inputs	SIL 3 (IEC 61508)
Proportion of safety-related outages (SFF)	98 %
HFT (hardware fault tolerance), inputs	1
Supply	
Supply voltage for inputs	24 V DC +20 %/ -15 %
Supply voltage for outputs	24 V DC +20 %/ -15 %
Feed current for I_{OUT} (output current path) , max.	8050
Current consumption I_{IN} (power segment of the field bus coupler), typ.	8 mA
Digital inputs	
Wire break detection	Yes
Short-circuit detection	Yes
General data	
Weight	82 g
Dimensions H x W x D	120 mm / 11.5 mm / 76 mm
Note	

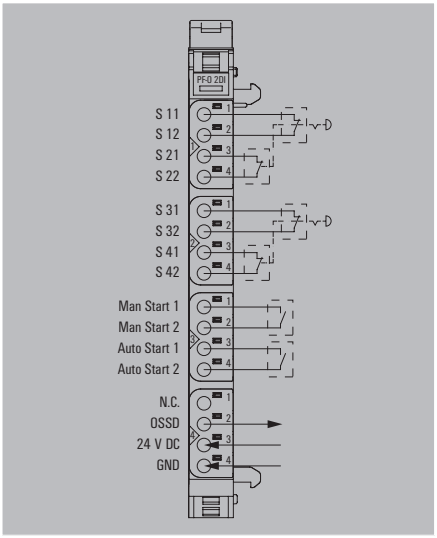

Product standard	IEC 61131-2
EMC	EN 61000
ATEX	EN 60079
UL	UL 61010-2-201
MSIP	MSIP-REM-WMG-1335050000

Ordering data

Module variants	Type	Qty.	Order No.
Safety module, 2 digital inputs	UR20-PF-O-2DI-SIL	1	**1335050000**
Note			

Accessories

	Type	Qty.	Order No.
Coding elements	KOSM BHZ5.00	100	**1483050000**
Termination kit	UR20-EBK-ACC	5	**1346610000**
Swivel marker	UR20-SM-ACC	20	**1339920000**
Connection marker for pusher custom printing	PM 2.7/2.6 MC SDR	192	**1323700000**
Connection marker for pusher neutral	PM 2.7/2.6 MC NE WS	960	**1323710000**
Module marker for custom printing	DEK 5/8-11.5 MC SDR	100	**1341610000**
Module marker for neutral	DEK 5/8-11.5 MC NE WS	500	**1341630000**
Thermotransfer version (Material: Polyester)	THM UR20 GE	1	**1429910000**
Thermotransfer version (material: polyester)	THM UR20 WS	1	**1429420000**
Paper version for Laserprinter	ESO UR20 DIN A4 WS	10	**1429430000**
Replacement parts			
Electronic module	UR20-EM-1335050000-SP	1	**1347540000**
Basic module	UR20-BM-PF-O-SIL-SP	5	**1350970000**
Plug-in connector unit	UR20-PK-1335050000-SP	5	**1346570000**
Note	1 roll = 1000 label = 1 Qty. 1 sheet = 60 label = 1 Qty.		

PF-O-2DI-DELAY-SIL

- SIL 3 safety standard in accordance with IEC 62061 and DIN EN ISO 13849-1, category 4, PL e
- Switch-off after adjustable delay
- Connection for an emergency stop circuit
- OSSD output reports status to control unit
- Pulsed input circuit for wire breakage and short-circuit detection
- Restart: manual or using autostart

UR20-PF-O-2DI-DELAY-SIL

Technical data

System data	
Interface	u-remote system bus
Transmission speed of system bus, max.	48 Mbit
Safety related data	
Achievable safety level, inputs	SIL 3 (IEC 61508)
Proportion of safety-related outages (SFF)	98 %
HFT (hardware fault tolerance), inputs	1
Supply	
Supply voltage for inputs	24 V DC +20 %/ -15 %
Supply voltage for outputs	24 V DC +20 %/ -15 %
Feed current for I_{OUT} (output current path) , max.	8050
Current consumption I_{IN} (power segment of the field bus coupler), typ.	8 mA
Digital inputs	
Wire break detection	Yes
Short-circuit detection	Yes
General data	
Weight	84 g
Dimensions H x W x D	120 mm / 11.5 mm / 76 mm
Note	

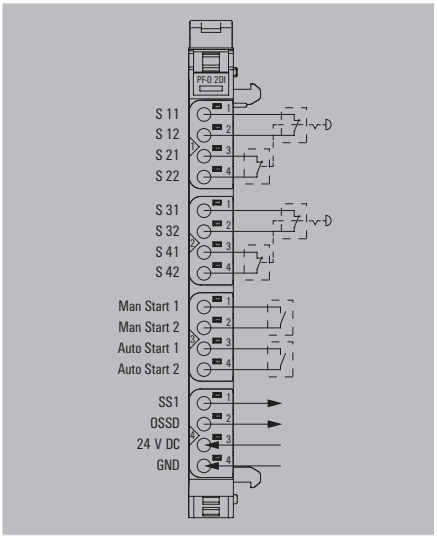

Ordering data

Module variants	Type	Qty.	Order No.
Safety module, 2 digital inputs, delayed	UR20-PF-O-2DI-DELAY-SIL	1	**1335040000**
Note			

Accessories

	Type	Qty.	Order No.
Coding elements	KOSM BHZ5.00	100	**1483050000**
Termination kit	UR20-EBK-ACC	5	**1346610000**
Swivel marker	UR20-SM-ACC	20	**1339920000**
Connection marker for pusher custom printing	PM 2.7/2.6 MC SDR	192	**1323700000**
Connection marker for pusher neutral	PM 2.7/2.6 MC NE WS	960	**1323710000**
Module marker for custom printing	DEK 5/8-11.5 MC SDR	100	**1341610000**
Module marker for neutral	DEK 5/8-11.5 MC NE WS	500	**1341630000**
Thermotransfer version (Material: Polyester)	THM UR20 GE	1	**1429910000**
Thermotransfer version (material: polyester)	THM UR20 WS	1	**1429420000**
Paper version for Laserprinter	ESO UR20 DIN A4 WS	10	**1429430000**
Replacement parts			
Electronic module	UR20-EM-1335040000-SP	1	**1347530000**
Basic module	UR20-BM-PF-O-SIL-SP	5	**1350970000**
Plug-in connector unit	UR20-PK-1335040000-SP	5	**1484100000**
Note	1 roll = 1000 label = 1 Qty. 1 sheet = 60 label = 1 Qty.		

Product standard	IEC 61131-2
EMC	EN 61000
ATEX	EN 60079
UL	UL 61010-2-201
MSIP	MSIP-REM-WMG-1335040000

Power-feed modules

10 A feeding; input or output current path; diagnosis visualisation

Weidmüller power-feed modules are available to refresh the power of the input and output current path. These feed 10 A, monitored by the voltage diagnosis display, in the corresponding input or output path. The time-saving commissioning is guaranteed by the standard u-remote plug with proven and tested PUSH IN technology for reliable contacting. The power supply is monitored by a diagnosis display.

UR20-PF-I

UR20-PF-O

PF-I

- Power supply in input current path
- Power supply current 10 A
- Integrated diagnosis display

UR20-PF-I

Technical data

Supply	
Supply voltage for inputs	24 V DC +20 %/ -15 %
Feed current for I_{IN} (input current path) , max.	10000 mA
Current consumption I_{IN} (the respective power segment)	< 10 mA
General data	
Weight	76 g
Dimensions H x W x D	120 mm / 11.5 mm / 76 mm
Note	

Ordering data

Module variants	Qty.	Order No.
Power supply module, 10 A	1	1334710000

Note

Accessories

	Qty.	Order No.
Coding elements	100	1483050000
Termination kit	5	1346610000
Swievel marker	20	1339920000
Connection marker for pusher custom printing	192	1323700000
Connection marker for pusher neutral	960	1323710000
Module marker for custom printing	100	1341610000
Module marker for neutral	500	1341630000
Thermotransfer version (Material: Polyester)	1	1429910000
Thermotransfer version (material: polyester)	1	1429420000
Paper version for Laserprinter	10	1429430000
Replacement parts		
Electronic module	1	1347380000
Basic module	5	1350940000
Plug-in connector unit	5	1346460000

Note

1 roll = 1000 label = 1 Qty.
1 sheet = 60 label = 1 Qty.

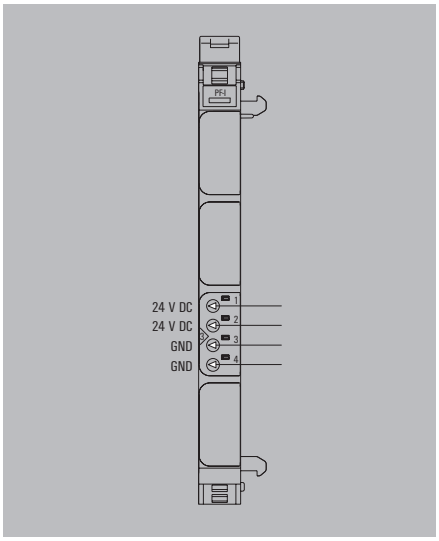

Product standard	IEC 61131-2
EMC	EN 61000
ATEX	EN 60079
UL	UL 61010-2-201
MSIP	MSIP-REM-WMG-1334710000

ABS (American Bureau of Shipping)
BSH (Federal Maritime and Hydrographic Agency of Germany)
BV (Bureau Veritas)
DNV GL (Det Norske Veritas) (Germanischer Lloyd)
LR (Lloyd's Register)
RINA (Registro Italiano Navale)

PF-O

- Power supply in output current path
- Power supply current 10 A
- Integrated diagnosis display

UR20-PF-O

Technical data

Supply	
Supply voltage for outputs	24 V DC +20 %/ -15 %
Feed current for I_{OUT} (output current path) , max.	10000 mA
Current consumption from I_{OUT} (the respective power segment)	< 10 mA
General data	
Weight	76 g
Dimensions H x W x D	120 mm / 11.5 mm / 76 mm
Note	

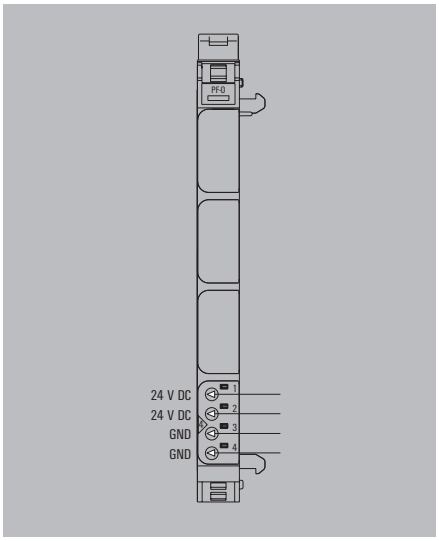

Ordering data

Module variants	Qty.	Order No.
Power supply module, 10 A	1	**1334740000**
Note		

Accessories

	Qty.	Order No.
Coding elements	100	**1483050000**
Termination kit	5	**1346610000**
Swivel marker	20	**1339920000**
Connection marker for pusher custom printing	192	**1323700000**
Connection marker for pusher neutral	960	**1323710000**
Module marker for custom printing	100	**1341610000**
Module marker for neutral	500	**1341630000**
Thermotransfer version (Material: Polyester)	1	**1429910000**
Thermotransfer version (material: polyester)	1	**1429420000**
Paper version for Laserprinter	10	**1429430000**
Replacement parts		
Electronic module	1	**1347420000**
Basic module	5	**1350950000**
Plug-in connector unit	5	**1346480000**
Note		
1 roll = 1000 label = 1 Qty. 1 sheet = 60 label = 1 Qty.		

Product standard	IEC 61131-2
EMC	EN 61000
ATEX	EN 60079
UL	UL 61010-2-201
MSIP	MSIP-REM-WMG-1334740000
ABS (American Bureau of Shipping)	
BSH (Federal Maritime and Hydrographic Agency of Germany)	
BV (Bureau Veritas)	
DNV GL (Det Norske Veritas) (Germanischer Lloyd)	
LR (Lloyd's Register)	
RINA (Registro Italiano Navale)	

Accessories

Potential distribution modules; system accessories

A wide range of accessory modules is provided for the individual requirements of machine and plant construction. Various potential distribution modules are available for directly supplying sensors with 2-wire, 3-wire or 3-wire+FE connection technology from the remote I/O system. These provide 16 “PUSH IN” potential points and supply your application with each auxiliary potential available. An empty module, where the system bus and voltage supply are looped through, allows you to plan expansion slots in a system and to start these up without any interruptions if required.

UR20-ES

UR20-16AUX-I

UR20-16AUX-O

UR20-16AUX-FE

UR20-16AUX-GND-I

UR20-16AUX-GND-O

AUX

- Distribution of the various potentials
- Actuator and sensor supply
- 16 “PUSH IN” potential contacts

UR20-16AUX

Technical data

Supply	
Voltage supply	24 V DC +20 %/ -15 %, from input or output current path / FE
General data	
Weight	84 g
Dimensions H x W x D	120 mm / 11.5 mm / 76 mm
Note	

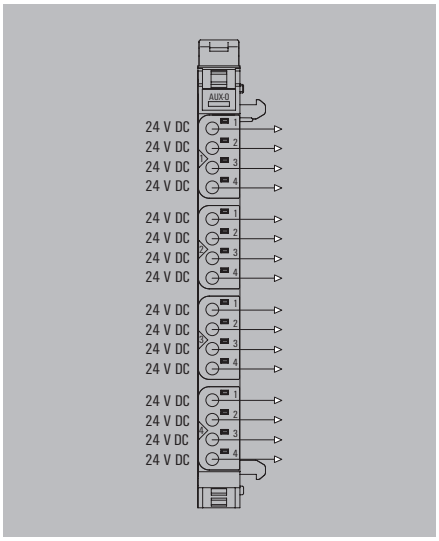

Ordering data

Module variants	Qty.	Order No.
Potential distribution module		
UR20-16AUX-I	1	1334770000
UR20-16AUX-O	1	1334780000
UR20-16AUX-FE	1	1334790000
UR20-16AUX-GND-I	1	1334800000
UR20-16AUX-GND-O	1	1334810000
Note		

Accessories

	Type	Qty.	Order No.
Coding elements	KOSM BHZ5.00	100	1483050000
Termination kit	UR20-EBK-ACC	5	1346610000
Swivel marker	UR20-SM-ACC	20	1339920000
Connection marker for pusher custom printing	PM 2.7/2.6 MC SDR	192	1323700000
Connection marker for pusher neutral	PM 2.7/2.6 MC NE WS	960	1323710000
Module marker for custom printing	DEK 5/8-11.5 MC SDR	100	1341610000
Module marker for neutral	DEK 5/8-11.5 MC NE WS	500	1341630000
Thermotransfer version (Material: Polyester)	THM UR20 GE	1	1429910000
Thermotransfer version (material: polyester)	THM UR20 WS	1	1429420000
Paper version for Laserprinter	ESO UR20 DIN A4 WS	10	1429430000
USB cable (USB A to Micro USB)	IE-USB-A-MICRO-1.8M	1	1487980000
Replacement parts			
Electronic module	UR20-EM-1334770000-SP	1	1347450000
	UR20-EM-1334780000-SP	1	1347470000
	UR20-EM-1334790000-SP	1	1347480000
	UR20-EM-1334800000-SP	1	1347490000
	UR20-EM-1334810000-SP	1	1347500000
Basic module	UR20-BM-SP	5	1350930000
Plug-in connector unit	UR20-PK-1334770000-SP	5	1346450000
	UR20-PK-1334790000-SP	5	1346490000
	UR20-PK-1334800000-SP	5	1346470000
	UR20-PK-1334780000-SP	5	1484080000
	UR20-PK-1334810000-SP	5	1484090000
Note	1 roll = 1000 label = 1 Qty. 1 sheet = 60 label = 1 Qty.		

Product standard	IEC 61131-2
EMC	EN 61000
ATEX	EN 60079
UL	UL 61010-2-201
MSIP	MSIP-REM-WMG-1334770000 MSIP-REM-WMG-1334780000 MSIP-REM-WMG-1334790000 MSIP-REM-WMG-1334800000 MSIP-REM-WMG-1334810000

ABS (American Bureau of Shipping)
BSH (Federal Maritime and Hydrographic Agency of Germany)
BV (Bureau Veritas)
DNV GL (Det Norske Veritas) (Germanischer Lloyd)
LR (Lloyd’s Register)
RINA (Registro Italiano Navale)

Empty slot module

UR20-ES

- Forwarding of system bus and voltage paths
- Space for subsequent expansion
- Basis for all I/O modules

Technical data

General data	
Weight	70 g
Dimensions H x W x D	120 mm / 11.5 mm / 76 mm
Note	

Ordering data

Module variants	Type	Qty.	Order No.
Empty module	UR20-ES	1	**1315770000**
Note			

Accessories

	Type	Qty.	Order No.
Coding elements	KOSM BHZ5.00	100	**1483050000**
Termination kit	UR20-EBK-ACC	5	**1346610000**
Swivel marker	UR20-SM-ACC	20	**1339920000**
Connection marker for pusher custom printing	PM 2.7/2.6 MC SDR	192	**1323700000**
Connection marker for pusher neutral	PM 2.7/2.6 MC NE WS	960	**1323710000**
Module marker for custom printing	DEK 5/8-11.5 MC SDR	100	**1341610000**
Module marker for neutral	DEK 5/8-11.5 MC NE WS	500	**1341630000**
Thermotransfer version (Material: Polyester)	THM UR20 GE	1	**1429910000**
Thermotransfer version (material: polyester)	THM UR20 WS	1	**1429420000**
Paper version for Laserprinter	ESO UR20 DIN A4 WS	10	**1429430000**
Replacement parts			
Electronic module	UR20-EM-1315770000-SP	1	**1347370000**
Basic module	UR20-BM-SP	5	**1350930000**
Plug-in connector unit	UR20-PK-1315770000-SP	5	**1346510000**
Note	1 roll = 1000 label = 1 Qty. 1 sheet = 60 label = 1 Qty.		

Product standard	IEC 61131-2
EMC	EN 61000
ATEX	EN 60079
UL	UL 61010-2-201
MSIP	MSIP-REM-WMG-1315770000

Termination kit

UR20-EBK

- Includes an end plate and two end brackets

Ordering data

Module variants	Type	Qty.	Order No.
Termination kit	UR20-EBK-ACC	5	**1346610000**
Note			

Individual components

It goes without saying that Weidmüller also allows you to swap defective parts. The three-part modules can therefore be ordered as individual components.

Ordering data spare parts

Product	Order No.	Plug-in connector unit	Order No.	Electronics module	Order No.	Basic module	Order No.
UR20-FBC-PB-DP-V2	2614380000	UR20-PK-2614380000-SP	2623120000				
UR20-FBC-PN-IRT-V2	2566380000	UR20-PK-2566380000-SP	2623640000				
UR20-FBC-EC	1334910000	UR20-PK-1334910000-SP	1484440000				
UR20-FBC-MOD-TCP-V2	2476450000	UR20-PK-2476450000-SP	2485280000				
UR20-FBC-EIP	1334920000	UR20-PK-1334920000-SP	1541290000				
UR20-FBC-DN	1334900000	UR20-PK-1334900000-SP	2003540000				
UR20-FBC-CAN	1334890000	UR20-PK-1334890000-SP	2003530000				
UR20-FBC-PL	1334940000	UR20-PK-1334940000-SP	2425170000				
UR20-4DI-P	1315170000	UR20-PK-1315170000-SP	1346440000	UR20-EM-1315170000-SP	1346640000	UR20-BM-SP	1350930000
UR20-4DI-P-3W	2009360000	UR20-PK-2009360000-SP	2011240000	UR20-EM-2009360000-SP	2011260000	UR20-BM-SP	1350930000
UR20-8DI-P-2W	1315180000	UR20-PK-1315180000-SP	1346430000	UR20-EM-1315180000-SP	1490220000	UR20-BM-SP	1350930000
UR20-8DI-P-3W	1394400000	UR20-PK-1394400000-SP	1411430000	UR20-EM-1394400000-SP	1434220000	UR20-BM-SP	1350930000
UR20-8DI-P-3W-HD	1315190000	UR20-PK-1315190000-SP	1518800000	UR20-EM-1315190000-SP	1346670000	UR20-BM-SP	1350930000
UR20-16DI-P	1315200000	UR20-PK-1315200000-SP	1346400000	UR20-EM-1315200000-SP	1346680000	UR20-BM-SP	1350930000
UR20-16DI-P-PLC-INT	1315210000	UR20-PK-1315210000-SP	1346590000	UR20-EM-1315210000-SP	1346690000	UR20-BM-SP	1350930000
UR20-2DI-P-TS	1460140000	UR20-PK-1460140000-SP	1484110000	UR20-EM-1460140000-SP	1463690000	UR20-BM-SP	1350930000
UR20-4DI-P-TS	1460150000	UR20-PK-1460150000-SP	1484430000	UR20-EM-1460150000-SP	1463680000	UR20-BM-SP	1350930000
UR20-4DI-N	1315350000	UR20-PK-1315350000-SP	1559770000	UR20-EM-1315350000-SP	1346870000	UR20-BM-SP	1350930000
UR20-8DI-N-3W	1315370000	UR20-PK-1315370000-SP	1559780000	UR20-EM-1315370000-SP	1346880000	UR20-BM-SP	1350930000
UR20-16DI-N	1315390000	UR20-PK-1315390000-SP	1559790000	UR20-EM-1315390000-SP	1346920000	UR20-BM-SP	1350930000
UR20-16DI-N-PLC-INT	1315400000	UR20-PK-1315400000-SP	1559800000	UR20-EM-1315400000-SP	1346930000	UR20-BM-SP	1350930000
UR20-4DI-2W-230V-AC	1550070000	UR20-PK-1550070000-SP	1559820000	UR20-EM-1550070000-SP	1558880000	UR20-BM-SP	1350930000
UR20-8DI-ISO-2W	2457240000	UR20-PK-2457240000-SP	2545760000	UR20-EM-2457240000-SP	2545780000	UR20-BM-SP	1350930000
UR20-4DO-P	1315220000	UR20-PK-1315220000-SP	1483960000	UR20-EM-1315220000-SP	1346700000	UR20-BM-SP	1350930000
UR20-4DO-P-2A	1315230000	UR20-PK-1315230000-SP	1483970000	UR20-EM-1315230000-SP	1346710000	UR20-BM-SP	1350930000
UR20-4DO-PN-2A	1394420000	UR20-PK-1394420000-SP	1483980000	UR20-EM-1394420000-SP	1480950000	UR20-BM-SP	1350930000
UR20-8DO-P	1315240000	UR20-PK-1315240000-SP	1346410000	UR20-EM-1315240000-SP	1346720000	UR20-BM-SP	1350930000
UR20-8DO-P-2W-HD	1509830000	UR20-PK-1509830000-SP	1559720000	UR20-EM-1509830000-SP	1515450000	UR20-BM-SP	1350930000
UR20-16DO-P	1315250000	UR20-PK-1315250000-SP	1483990000	UR20-EM-1315250000-SP	1346730000	UR20-BM-SP	1350930000
UR20-16DO-P-PLC-INT	1315270000	UR20-PK-1315270000-SP	1483940000	UR20-EM-1315270000-SP	1346740000	UR20-BM-SP	1350930000
UR20-4DO-N	1315410000	UR20-PK-1315410000-SP	1559840000	UR20-EM-1315410000-SP	1346940000	UR20-BM-SP	1350930000
UR20-4DO-N-2A	1315420000	UR20-PK-1315420000-SP	1559850000	UR20-EM-1315420000-SP	1346950000	UR20-BM-SP	1350930000
UR20-8DO-N	1315430000	UR20-PK-1315430000-SP	1984770000	UR20-EM-1315430000-SP	1346970000	UR20-BM-SP	1350930000
UR20-16DO-N	1315440000	UR20-PK-1315440000-SP	2000520000	UR20-EM-1315530000-SP	1346980000	UR20-BM-SP	1350930000
UR20-16DO-N-PLC-INT	1315450000	UR20-PK-1315450000-SP	2000540000	UR20-EM-1315450000-SP	1346990000	UR20-BM-SP	1350930000
UR20-4DO-ISO-4A	2457250000	UR20-PK-2457250000-SP	2545770000	UR20-EM-2457250000-SP	2545790000	UR20-BM-SP	1350930000
UR20-8DIO-P-3W-DIAG	2456530000	UR20-PK-2456530000-SP	2593320000	UR20-EM-2456530000-SP	2593330000	UR20-BM-SP	1350930000
UR20-4RO-SSR-255	1315540000	UR20-PK-1315540000-SP	1484000000	UR20-EM-1315540000-SP	1347120000	UR20-BM-SP	1350930000
UR20-4RO-CO-255	1315550000	UR20-PK-1315550000-SP	1346500000	UR20-EM-1315550000-SP	1347130000	UR20-BM-SP	1350930000
UR20-2PWM-PN-0.5A	1315600000	UR20-PK-1315600000-SP	1484010000	UR20-EM-1315600000-SP	1347180000	UR20-BM-SP	1350930000
UR20-2PWM-PN-2A	1315610000	UR20-PK-1315610000-SP	1346550000	UR20-EM-1315610000-SP	1347190000	UR20-BM-SP	1350930000
UR20-1SM-50W-6DI2DO-P	2489830000	UR20-PK1-2489830000-SP	2573750000	UR20-EM-2489830000-SP	2585660000	UR20-BM-SP	1350930000
		UR20-PK2-2489830000-SP	2585650000			UR20-BM-SP	1350930000
UR20-4AI-UI-12	1394390000	UR20-PK-1394390000-SP	1484030000	UR20-EM-1394390000-SP	1434230000	UR20-BM-SP	1350930000
UR20-4AI-UI-16	1315620000	UR20-PK-1315620000-SP	1484020000	UR20-EM-1315620000-SP	1347200000	UR20-BM-SP	1350930000
UR20-4AI-UI-16-DIAG	1315690000	UR20-PK-1315690000-SP	1518870000	UR20-EM-1315690000-SP	1347280000	UR20-BM-SP	1350930000
UR20-4AI-UI-16-HD	1506920000	UR20-PK-1506920000-SP	1518830000	UR20-EM-1506920000-SP	1515420000	UR20-BM-SP	1350930000
UR20-4AI-UI-16-DIAG-HD	1506910000	UR20-PK-1506910000-SP	1518820000	UR20-EM-1506910000-SP	1515430000	UR20-BM-SP	1350930000
UR20-8AI-I-16-HD	1315650000	UR20-PK-1315650000-SP	1559740000	UR20-EM-1315650000-SP	1347240000	UR20-BM-SP	1350930000
UR20-8AI-I-16-DIAG-HD	1315720000	UR20-PK-1315720000-SP	1559750000	UR20-EM-1315720000-SP	1347320000	UR20-BM-SP	1350930000
UR20-8AI-I-PLC-INT	1315670000	UR20-PK-1315670000-SP	1483950000	UR20-EM-1315670000-SP	1347250000	UR20-BM-SP	1350930000
UR20-4AI-UI-DIF-16-DIAG	1993880000	UR20-PK-1993880000-SP	2446200000	UR20-EM-1993880000-SP	2446190000	UR20-BM-SP	1350930000
UR20-4AI-TC-DIAG	1315710000	UR20-PK-1315710000-SP	1484050000	UR20-EM-1315710000-SP	1435740000	UR20-BM-SP	1350930000
UR20-4AI-RTD-DIAG	1315700000	UR20-PK-1315700000-SP	1484040000	UR20-EM-1315700000-SP	1347290000	UR20-BM-SP	1350930000
UR20-4AI-RTD-HP-DIAG	2456540000	UR20-PK-2456540000-SP	2545610000	UR20-EM-2456540000-SP	2545620000	UR20-BM-SP	1350930000
UR20-4AI-R-HS-16-DIAG	2001670000	UR20-PK-2001670000-SP	2068610000	UR20-EM-2001670000-SP	2068640000	UR20-BM-SP	1350930000
UR20-8AI-RTD-DIAG-2W	2555940000	UR20-PK-2555940000-SP	2593300000	UR20-EM-2555940000-SP	2593310000	UR20-BM-SP	1350930000
UR20-2AI-SG-24-DIAG	1990070000	UR20-PK-1990070000-SP	2068620000	UR20-EM-1990070000-SP	1562260000	UR20-BM-SP	1350930000
UR20-3EM-230V-AC	2007420000	UR20-PK-2007420000-SP	2068630000	UR20-EM-2007420000-SP	1562270000	UR20-BM-SP	1350930000
UR20-4AO-UI-16	1315680000	UR20-PK-1315680000-SP	1484070000	UR20-EM-1315680000-SP	1347270000	UR20-BM-SP	1350930000
UR20-4AO-UI-16-M	2453880000	UR20-PK-2453880000-SP	2508770000	UR20-EM-2453880000-SP	2508790000	UR20-BM-SP	1350930000
UR20-4AO-UI-16-DIAG	1315730000	UR20-PK-1315730000-SP	1518880000	UR20-EM-1315730000-SP	1347330000	UR20-BM-SP	1350930000
UR20-4AO-UI-16-M-DIAG	2453870000	UR20-PK-2453870000-SP	2508780000	UR20-EM-2453870000-SP	2508800000	UR20-BM-SP	1350930000
UR20-4AO-UI-16-HD	1510690000	UR20-PK-1510690000-SP	1531830000	UR20-EM-1510690000-SP	1515470000	UR20-BM-SP	1350930000
UR20-4AO-UI-16-DIAG-HD	1506930000	UR20-PK-1506930000-SP	1531810000	UR20-EM-1506930000-SP	1515480000	UR20-BM-SP	1350930000
UR20-1CNT-100-1DO	1315570000	UR20-PK-1315570000-SP	1346520000	UR20-EM-1315570000-SP	1347140000	UR20-BM-SP	1350930000
UR20-2CNT-100	1315590000	UR20-PK-1315590000-SP	1346540000	UR20-EM-1315590000-SP	1347150000	UR20-BM-SP	1350930000
UR20-1CNT-500	1315580000	UR20-PK-1315580000-SP	1346530000	UR20-EM-1315580000-SP	1347170000	UR20-BM-SP	1350930000
UR20-2FCNT-100	1508080000	UR20-PK-1508080000-SP	1518840000	UR20-EM-1508080000-SP	1515440000	UR20-BM-SP	1350930000
UR20-1SSI	1508090000	UR20-PK-1508090000-SP	1559870000	UR20-EM-1508090000-SP	1515490000	UR20-BM-SP	1350930000
UR20-1COM-232-485-422	1315750000	UR20-PK-1315750000-SP	2425150000	UR20-EM-1315750000-SP	1347350000	UR20-BM-SP	1350930000
UR20-1COM-SAI-PRO	2007430000	UR20-PK-2007430000-SP	2425160000	UR20-EM-2007430000-SP	2425350000	UR20-BM-SP	1350930000
UR20-4COM-IO-LINK	1315740000	UR20-PK-1315740000-SP	2508760000	UR20-EM-1315740000-SP	1347340000	UR20-BM-SP	1350930000
		UR20-PK-1529780000-SP	1992960000	UR20-EM-1529780000-SP	1993030000	UR20-BM-SP	1350930000
UR20-4DI-4DO-PN-FSOE-V2	2464580000	UR20-PK-2464580000-SP	2465990000	UR20-EM-2464580000-SP	2466020000	UR20-BM-SP	1350930000
		UR20-PK-1529800000-SP	1992970000	UR20-EM-1529800000-SP	1993040000	UR20-BM-SP	1350930000
UR20-8DI-PN-FSOE-V2	2464600000	UR20-PK-2464600000-SP	2465940000	UR20-EM-2464600000-SP	2465960000	UR20-BM-SP	1350930000
		UR20-PK-1335060000-SP	1992940000	UR20-EM-1335060000-SP	1347550000	UR20-BM-SP	1350930000
UR20-4DI-4DO-PN-FSPS-V2	2464570000	UR20-PK-2464570000-SP	2466000000	UR20-EM-2464570000-SP	2466030000	UR20-BM-SP	1350930000
		UR20-PK-1335070000-SP	1992950000	UR20-EM-1335070000-SP	1347570000	UR20-BM-SP	1350930000
UR20-8DI-PN-FSPS-V2	2464590000	UR20-PK-2464590000-SP	2465950000	UR20-EM-2464590000-SP	2466010000	UR20-BM-SP	1350930000
UR20-PF-O-1DI-SIL	1335030000	UR20-PK-1335030000-SP	1346560000	UR20-EM-1335030000-SP	1347520000	UR20-BM-SIL-SP	1350970000
UR20-PF-O-2DI-SIL	1335050000	UR20-PK-1335050000-SP	1346570000	UR20-EM-1335050000-SP	1347540000	UR20-BM-SIL-SP	1350970000
UR20-PF-O-2DI-DELAY-SIL	1335040000	UR20-PK-1335040000-SP	1484100000	UR20-EM-1335040000-SP	1347530000	UR20-BM-SIL-SP	1350970000
UR20-PF-I	1334710000	UR20-PK-1334710000-SP	1346460000	UR20-EM-1334710000-SP	1347380000	UR20-BM-PF-I-SP	1350940000
UR20-PF-O	1334740000	UR20-PK-1334740000-SP	1346480000	UR20-EM-1334740000-SP	1347420000	UR20-BM-PF-O-SP	1350950000
UR20-16AUX-I	1334770000	UR20-PK-1334770000-SP	1346450000	UR20-EM-1334770000-SP	1347450000	UR20-BM-SP	1350930000
UR20-16AUX-O	1334780000	UR20-PK-1334780000-SP	1484080000	UR20-EM-1334780000-SP	1347470000	UR20-BM-SP	1350930000
UR20-16AUX-FE	1334790000	UR20-PK-1334790000-SP	1346490000	UR20-EM-1334790000-SP	1347480000	UR20-BM-SP	1350930000
UR20-16AUX-GND-I	1334800000	UR20-PK-1334800000-SP	1346470000	UR20-EM-1334800000-SP	1347490000	UR20-BM-SP	1350930000
UR20-16AUX-GND-O	1334810000	UR20-PK-1334810000-SP	1484090000	UR20-EM-1334810000-SP	1347500000	UR20-BM-SP	1350930000
UR20-ES	1315770000	UR20-PK-1315770000-SP	1346510000	UR20-EM-1315770000-SP	1347370000	UR20-BM-SP	1350930000
Note		All Plug-in connector units: Qty. = 5		All electronic modules: Qty. = 1		All basic modules: Qty. = 5	

System overview

Below you will find assistance for putting together your system. Please note the maximum number of 64 active modules and the packaging units for the accessories! More detailed technical data and product descriptions can be found here in the catalogue in the corresponding chapter.

At the bottom right-hand side of this page, you will find assistance for supplying the current paths.

1. What field bus are you using?

Bus	Type	Order No.	Page
PROFIBUS	UR20-FBC-PB-DP-V2	**2614380000**	B.5
PROFINET	UR20-FBC-PN-IRT-V2	**2566380000**	B.7
EtherCAT	UR20-FBC-EC	**1334910000**	B.9
Modbus	UR20-FBC-MOD-TCP-V2	**2476450000**	B.11
EtherNet/IP	UR20-FBC-EIP	**1334920000**	B.13
DeviceNet	UR20-FBC-DN	**1334900000**	B.15
CANopen	UR20-FBC-CAN	**1334890000**	B.17
POWERLINK	UR20-FBC-PL	**1334940000**	B.19

2. What signals do you want to process?

Digital inputs	Order No.	Page
UR20-4DI-P	**1315170000**	B.21
UR20-4DI-P-3W	**2009360000**	B.22
UR20-8DI-P-2W	**1315180000**	B.23
UR20-8DI-P-3W	**1394400000**	B.24
UR20-8DI-P-3W-HD	**1315190000**	B.25
UR20-16DI-P	**1315200000**	B.26
UR20-16DI-P-PLC-INT	**1315210000**	B.27
UR20-2DI-P-TS	**1460140000**	B.28
UR20-4DI-P-TS	**1460150000**	B.29
UR20-4DI-N	**1315350000**	B.30
UR20-8DI-N-3W	**1315370000**	B.31
UR20-16DI-N	**1315390000**	B.32
UR20-16DI-N-PLC-INT	**1315400000**	B.33
UR20-4DI-2W-230V-AC	**1550070000**	B.35
UR20-8DI-ISO-2W	**2457240000**	B.34
Digital outputs		**Page**
UR20-4DO-P	**1315220000**	B.37
UR20-4DO-P-2A	**1315230000**	B.38
UR20-4DO-PN-2A	**1394420000**	B.39
UR20-8DO-P	**1315240000**	B.40
UR20-8DO-P-2W-HD	**1509830000**	B.41
UR20-16DO-P	**1315250000**	B.42
UR20-16DO-P-PLC-INT	**1315270000**	B.43
UR20-4DO-N	**1315410000**	B.44
UR20-4DO-N-2A	**1315420000**	B.45
UR20-8DO-N	**1315430000**	B.46
UR20-16DO-N	**1315440000**	B.47
UR20-16DO-N-PLC-INT	**1315450000**	B.48
UR20-4DO-ISO-4A	**2457250000**	B.49
UR20-8DIO-P-3W-DIAG	**2456530000**	B.53
UR20-4RO-SSR-255	**1315540000**	B.50
UR20-4RO-CO-255	**1315550000**	B.51
UR20-2PWM-PN-0.5A	**1315600000**	B.55
UR20-2PWM-PN-2A	**1315610000**	B.56
UR20-1SM-50W-6DI2DO-P	**2489830000**	B.57

2. What signals do you want to process?

Analogue inputs	Order No.	Page
UR20-4AI-UI-12	**1394390000**	B.59
UR20-4AI-UI-16	**1315620000**	B.60
UR20-4AI-UI-16-DIAG	**1315690000**	B.61
UR20-4AI-UI-16-HD	**1506920000**	B.62
UR20-4AI-UI-16-DIAG-HD	**1506910000**	B.63
UR20-8AI-I-16-HD	**1315650000**	B.64
UR20-8AI-I-16-DIAG-HD	**1315720000**	B.65
UR20-8AI-I-PLC-INT	**1315670000**	B.66
UR20-4AI-UI-DIF-16-DIAG	**1993880000**	B.67
UR20-4AI-TC-DIAG	**1315710000**	B.74
UR20-4AI-RTD-DIAG	**1315700000**	B.71
UR20-4AI-RTD-HP-DIAG	**2456540000**	B.72
UR20-4AI-R-HS-16-DIAG	**2001670000**	B.75
UR20-8AI-RTD-DIAG-2W	**2555940000**	B.73
UR20-2AI-SG-24-DIAG	**1990070000**	B.77
UR20-3EM-230V-AC	**2007420000**	B.79
Analogue outputs		**Page**
UR20-4AO-UI-16	**1315680000**	B.81
UR20-4AO-UI-16-M	**2453880000**	B.82
UR20-4AO-UI-16-DIAG	**1315730000**	B.83
UR20-4AO-UI-16-M-DIAG	**2453870000**	B.84
UR20-4AO-UI-16-HD	**1510690000**	B.85
UR20-4AO-UI-16-DIAG-HD	**1506930000**	B.86
Digital counter- and communication modules		**Page**
UR20-1CNT-100-1DO	**1315570000**	B.89
UR20-2CNT-100	**1315590000**	B.90
UR20-1CNT-500	**1315580000**	B.91
UR20-2FCNT-100	**1508080000**	B.92
UR20-1SSI	**1508090000**	B.93
UR20-1COM-232-485-422	**1315750000**	B.94
UR20-1COM-SAI-PRO	**2007430000**	B.95
UR20-4COM-IO-LINK	**1315740000**	B.96
Further functional modules		**Page**
UR20-4DI-4DO-PN-FSOE-V2	**2464580000**	B.99
UR20-8DI-PN-FSOE-V2	**2464600000**	B.100
UR20-4DI-4DO-PN-FSPS-V2	**2464570000**	B.101
UR20-8DI-PN-FSPS-V2	**2464590000**	B.102

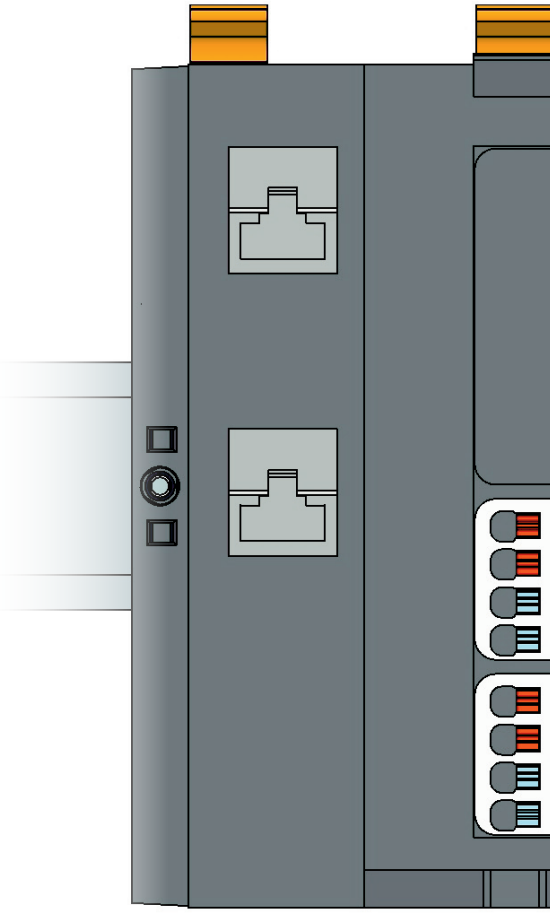

3. Do you need more than 10 A on the input or output path? Then you will need an additional supply! There is a sample calculation at the bottom of this page.

	Order No.	Page
UR20-PF-O-1DI-SIL	1335030000	B.103
UR20-PF-O-2DI-SIL	1335050000	B.104
UR20-PF-O-2DI-DELAY-SIL	1335040000	B.105
UR20-PF-I	1334710000	B.107
UR20-PF-O	1334740000	B.108

4. AUX and accessories

AUX	Order No.	Page
UR20-16AUX-I	1334770000	B.111
UR20-16AUX-O	1334780000	B.111
UR20-16AUX-FE	1334790000	B.111
UR20-16AUX-GND-I	1334800000	B.111
UR20-16AUX-GND-O	1334810000	B.111
Accessories		**Page**
Termination kit	1346610000	B.112
Swievel marker	1339920000	B.112
Connection marker for pusher custom printing	1323700000	B.112
Connection marker for pusher neutral	1323710000	B.112
Module marker for custom printing	1341610000	B.112
Module marker for neutral	1341630000	B.112
Empty module	1315770000	B.112
Thermotransfer version (Material: Polyester)	1429910000	B.112
Thermotransfer version (Material: Polyester)	1429420000	B.112
Paper version for Laserprinter	1429430000	B.112

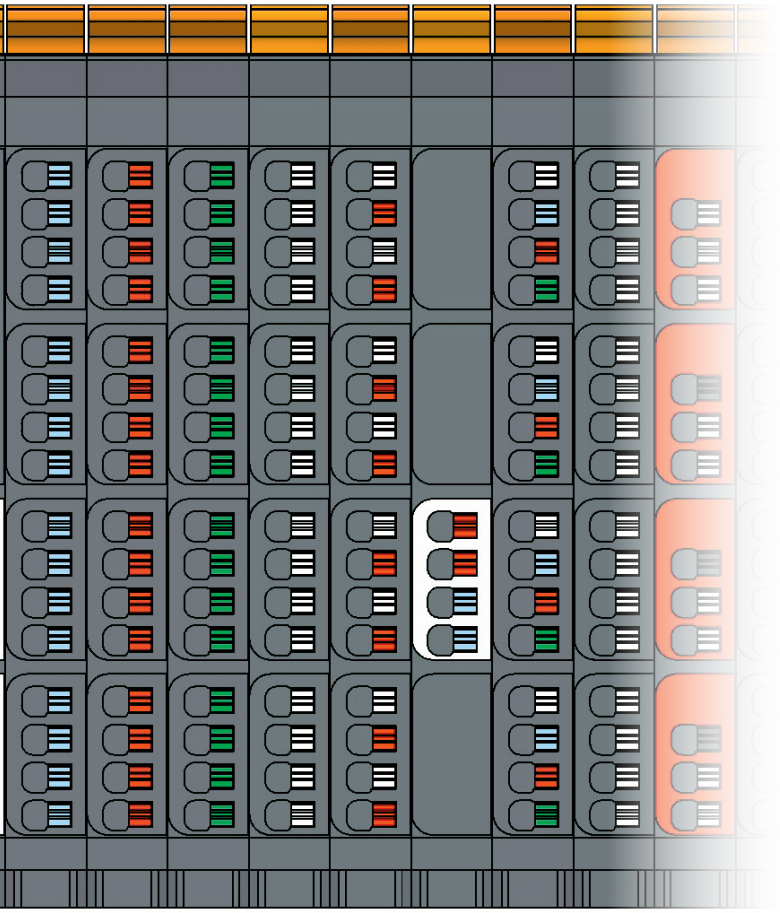

The additional supply calculation is different for each application. Simultaneity factors and current requirement must be known. To assist you, we have produced the example shown here in a simplified form.
Our example uses a row of 8-DO modules, i.e. units which can hold four actuator connections each. The actual current needed and therefore the position for a power-feed module to supply the current path can be determined from the mathematical combination of current requirement and simultaneity factor. Please note that u-remote provides an input and an output current path. Both must be included in the additional supply calculation. The system voltage doesn't have to be taken into account.

Sample calculation

Module no.	Module type	Current requirement of connected devices (A)	Simultaneity factor	Current following calculation of simultaneity factor per module	Current requirement of system - cumulative	Current requirement of system - cumulative with UR20-PF-O
1st module	UR20-8DO-P	0.5	0.5	0.25	0.25	0.25
2nd module	UR20-8DO-P	0.3	0.5	0.15	0.4	0.4
3rd module	UR20-8DO-P	2.0	0.7	1.4	1.8	1.8
4th module	UR20-8DO-P	2.0	0.5	1	2.8	2.8
5th module	UR20-8DO-P	2.0	0.3	2	4.8	4.8
6th module	UR20-8DO-P	0.5	0.2	0.1	4.9	4.9
7th module	UR20-8DO-P	1.0	0.1	0.75	5.65	5.65
8th module	UR20-8DO-P	1.0	0.2	0.2	5.85	5.85
9th module	UR20-8DO-P	1.2	0.5	0.6	6.45	6.45
10th module	UR20-8DO-P	2.0	1.0	2	8.45	8.45
	UR20-PF-O					
11th module	UR20-8DO-P	2.0	1.0	2	10.45	2
12th module	UR20-8DO-P	3.0	1.0	1	11.45	3
13th module	UR20-8DO-P	2.0	1.0	2	13.45	5

Current requirement exceeds 10 A!
The output current path therefore needs an additional supply before the 11th module.

10 A supplied by the UR20-PF-O module.
The 1.55 A calculated as remaining after the 10th module must not be added to the 10 A after the UR20-PF-O module!

I/O system IP67
u-remote

I/O system IP67
u-remote

Introduction	C.2
u-remote IP67 – PROFINET, IO-Link, Multiprotocol, Push/Pull	C.4
u-remote IP67 – PROFIBUS	C.12
SAI Active Universal – Overview	C.18
SAI Active Universal – CANopen	C.19
SAI Active Universal – DeviceNet™	C.21
SAI Active Universal Pro – Overview	C.24
SAI Active Universal Pro	C.25
Accessories for sensor cables	C.32
Quick Reference IP67 remote I/O modules	C.38

Remote I/O system in protection class IP67

Flexible sensor/actuator coupling to control systems in IP67 area in industrial environment

In both machine and plant construction, sensors and actuators from the entire machine have to be connected to the control unit. Depending on the machine, the size and also the count of the signals may be very large so that fieldbuses and IO systems can be used to collect the signals locally.
The u-remote IP67 product family solves this problem by means of IP67 protected encapsulation at the very point where the sensors and actuators are located. In the variants with a subbus system, this is done very flexibly and in a wide range of applications.
Direct incorporation in the PLC programming environment, rapid definition of causes in the event of faults and a very narrow and lightweight design are the characteristics which make this system unique on the market.

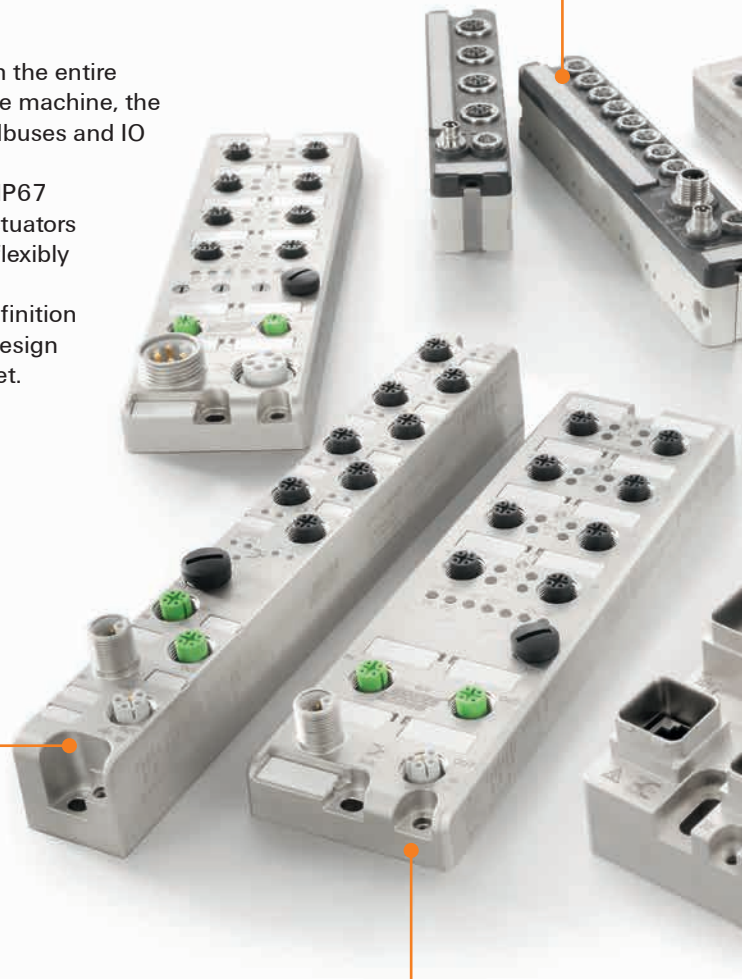

Improved Connectivity Technology
With the I-coded M12 or PushPull Power connectors the ampacity of the connectors has been increased to 16 A.
For a control of significantly more actuators and therefore more decentral remote I/Os are possible. Take advantage of the opportunities for more flexible planning in your system!

Efficient engineering
Direct incorporation and configuration in the standard PLC engineering systems with webserver

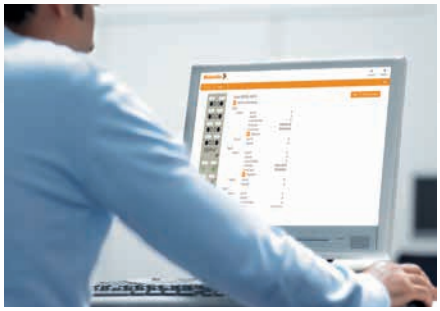

50 % reduced costs through flexible sub-bus concept
Sub-bus length of up to 50 m with up to 15 slaves per sub-bus enables an extremely flexible setup.

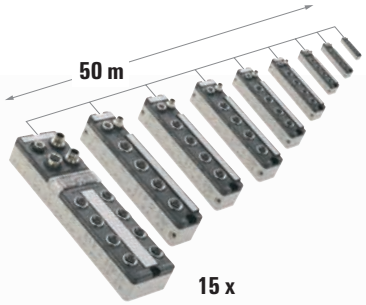

Remote I/O system as complete system on the panel
An extremely wide range of sensor and actuator cables, fieldbus cables and customisable plug-in connectors round off the range.

Advanced diagnostic capabilities
A channel wise diagnosis based on two-colored LEDs will quickly and clearly shows the state of the individual channels on site!

Freedom of choice
Support for all common field bus systems.

PROFIBUS®

PROFINET®

EtherCAT®

EtherNet/IP™

DeviceNet™

CANopen

PROFINET

Remote I/O for digital signal conditioning

	UR67-PN-HP-8IOL-12-30M	UR67-PN-HP-8IOL-12-60M

Technical data

Connections		
Fieldbus (BUS-IN)	1x M12 female 4-pole, D-coded	1x M12 female 4-pole, D-coded
Fieldbus (BUS-OUT)	1x M12 female 4-pole, D-coded	1x M12 female 4-pole, D-coded
Supply voltage (AUX-IN)	1x M12 plug 5-pole, L-coded	1x M12 plug 5-pole, L-coded
Supply voltage (AUX-OUT)	1x M12 socket 5-pole, L-coded	1x M12 socket 5-pole, L-coded
I/O connections	8 x M12 socket 5-pole, A-coded	8 x M12 socket 5-pole, A-coded
Supply voltage		
Operating voltage	24 V (18 V DC ... 30 V DC)	24 V (18 V DC ... 30 V DC)
Power consumption of module electronics	160 mA typical	160 mA typical
Digital inputs		
IO link standard	IO-Link v.1.1, IEC 61131-9	IO-Link v.1.1, IEC 61131-9
Galvanic isolation	2000 V DC	2000 V DC
Input current, low	Type 1 in acc. with IEC 61131-2	Type 1 in acc. with IEC 61131-2
Input current, high	Type 1 in acc. with IEC 61131-2	Type 1 in acc. with IEC 61131-2
Status indicator	Per channel, via LED, yellow	Per channel, via LED, yellow
Diagnostic display	Per channel, via LED, red	Per channel, via LED, red
Digital outputs		
max. current-carrying capacity per output signal	0.5 A, 2 A	0.5 A, 2 A
Output voltage, low	- 1 V	- 1 V
Output voltage, high	max. 2 V	max. 2 V
Status indicator	Per channel, via LED, yellow	Per channel, via LED, yellow
Diagnostic display	Per channel, via LED, red	Per channel, via LED, red
Fieldbus		
Bus system	PROFINET V2.3	PROFINET V2.3
Transmission rate	10/100 MBit/s	10/100 MBit/s
Addressing	DCP	DCP
General data		
L x W x H	225 mm / 30 mm / 30 mm	200 mm / 59.6 mm / 17.6 mm
Earth	480 g	500 g
Protection degree	IP67	IP67
Operating temperature	-20...70 °C	-20...70 °C
Housing main material / UL 94 flammability rating	Zinc diecast / UL 94	Zinc diecast / UL 94
Note	Download of GSDML-files on www.weidmueller.com	Download of GSDML-files on www.weidmueller.com

Ordering data

Module variants	**Type**	**Qty.**	**Order No.**	**Type**	**Qty.**	**Order No.**
IO link, 4 x type A, 4 x type B	UR67-PN-HP-8IOL-12-30M	1	**2426250000**	UR67-PN-HP-8IOL-12-60M	1	**2426260000**
Note						

Accessories

	Type	**Qty.**	**Order No.**	**Type**	**Qty.**	**Order No.**
M12 sensor cable	SAIL-M12G-5-1.5U	1	**9457610150**	SAIL-M12G-5-1.5U	1	**9457610150**
M12 sensor cable	SAIL-M12W-5-1.5U	1	**9457670150**	SAIL-M12W-5-1.5U	1	**9457670150**
Bus cable	IE-C5DD4UG0015MCSA20-E	1	**1044470015**	IE-C5DD4UG0015MCSA20-E	1	**1044470015**
Bus cable	IE-C5DD4UG0015MCSMCS-E	1	**1025950015**	IE-C5DD4UG0015MCSMCS-E	1	**1025950015**
Markers	MF 5/10 MC NE WS	250	**1954050000**	ESG-M 8/20 MC NE WS	200	**1027290000**
Plug						
Metal plug Ethernet, Male M12, D-coded, straight	SAISM-4/8S-M12-4P D-COD	1	**1892120000**	SAISM-4/8S-M12-4P D-COD	1	**1892120000**
Note	Further cables can be found at the end of this chapter.			Further cables can be found at the end of this chapter.		

Multiprotocol

Remote I/O for digital signal conditioning

PROFINET · EtherCAT · EtherNet/IP · Multiprotocol

	UR67-MP-HP-16DI-12-M60	UR67-MP-HP-16DO-12-M60

Technical data

Connections		
Fieldbus (BUS-IN)	1x M12 female 4-pole, D-coded	1x M12 female 4-pole, D-coded
Fieldbus (BUS-OUT)	1x M12 female 4-pole, D-coded	1x M12 female 4-pole, D-coded
Supply voltage (AUX-IN)	1x M12 plug 5-pole, L-coded	1x M12 plug 5-pole, L-coded
Supply voltage (AUX-OUT)	1x M12 socket 5-pole, L-coded	1x M12 socket 5-pole, L-coded
I/O connections	8 x M12 socket 5-pole, A-coded	8 x M12 socket 5-pole, A-coded
Supply voltage		
Operating voltage	24 V (18 V DC ... 30 V DC)	24 V (18 V DC ... 30 V DC)
Power consumption of module electronics	100 mA typical	100 mA typical
Digital inputs		
Input current, low	Type 1 in acc. with IEC 61131-2	
Input current, high	Type 1 in acc. with IEC 61131-2	
Status indicator	Per channel, via LED, yellow	
Diagnostic display	Per channel, via LED, red	
Digital outputs		
max. current-carrying capacity per output signal		2 A
Output voltage, low		min. (UL -1)
Output voltage, high		max. 2 V
Status indicator		Per channel, via LED, yellow
Diagnostic display		Per channel, via LED, red
Fieldbus		
Bus system	PROFINET V2.3, EtherNet/IP, EtherCAT, Multiprotocol	PROFINET V2.3, EtherNet/IP, EtherCAT, Multiprotocol
Transmission rate	10/100 MBit/s	10/100 MBit/s
Addressing	Via rotary coding switch, DCP	Via rotary coding switch, DCP
General data		
L x W x H	200 mm / 59.6 mm / 17.6 mm	200 mm / 59.6 mm / 17.6 mm
Earth	500 g	500 g
Protection degree	IP67	IP67
Operating temperature	-20...70 °C	-20...70 °C
Housing main material / UL 94 flammability rating	Zinc diecast / UL 94	Zinc diecast / UL 94
Note	Download the configuration files from www.weidmueller.com	Download the configuration files from www.weidmueller.com

Ordering data

Module variants	Type	Qty.	Order No.	Type	Qty.	Order No.
16 digital inputs	UR67-MP-HP-16DI-12-60M	1	**2426270000**			
16 digital out				UR67-MP-HP-16DO-12-60M	1	**2426280000**
Note						

Accessories

	Type	Qty.	Order No.	Type	Qty.	Order No.
M12 sensor cable	SAIL-M12G-5-1.5U	1	**9457610150**	SAIL-M12G-5-1.5U	1	**9457610150**
M12 sensor cable	SAIL-M12W-5-1.5U	1	**9457670150**	SAIL-M12W-5-1.5U	1	**9457670150**
Bus cable	IE-C5DD4UG0015MCSA20-E	1	**1044470015**	IE-C5DD4UG0015MCSA20-E	1	**1044470015**
Bus cable	IE-C5DD4UG0015MCSMCS-E	1	**1025950015**	IE-C5DD4UG0015MCSMCS-E	1	**1025950015**
Markers	ESG-M 8/20 MC NE WS	200	**1027290000**	ESG-M 8/20 MC NE WS	200	**1027290000**
Plug						
Metal plug Ethernet, Male M12, D-coded, straight	SAISM-4/8S-M12-4P D-COD	1	**1892120000**	SAISM-4/8S-M12-4P D-COD	1	**1892120000**
Note	Further cables can be found at the end of this chapter.			Further cables can be found at the end of this chapter.		

Multiprotocol

Remote I/O for digital signal conditioning

PROFINET · EtherCAT · EtherNet/IP · Multiprotocol

	UR67-MP-HP-8DIDO-12-60M	UR67-MP-HP-16DIO-12-60M

Technical data

Connections		
Fieldbus (BUS-IN)	1x M12 female 4-pole, D-coded	1x M12 female 4-pole, D-coded
Fieldbus (BUS-OUT)	1x M12 female 4-pole, D-coded	1x M12 female 4-pole, D-coded
Supply voltage (AUX-IN)	1x M12 plug 5-pole, L-coded	1x M12 plug 5-pole, L-coded
Supply voltage (AUX-OUT)	1x M12 socket 5-pole, L-coded	1x M12 socket 5-pole, L-coded
I/O connections	8 x M12 socket 5-pole, A-coded	8 x M12 socket 5-pole, A-coded
Supply voltage		
Operating voltage	24 V (18 V DC ... 30 V DC)	24 V (18 V DC ... 30 V DC)
Power consumption of module electronics	100 mA typical	100 mA typical
Digital inputs		
Input current, low	Type 1 in acc. with IEC 61131-2	Type 1 in acc. with IEC 61131-2
Input current, high	Type 1 in acc. with IEC 61131-2	Type 1 in acc. with IEC 61131-2
Status indicator	Per channel, via LED, yellow	Per channel, via LED, yellow
Diagnostic display	Per channel, via LED, red	Per channel, via LED, red
Digital outputs		
max. current-carrying capacity per output signal	2 A	2 A
Output voltage, low	min. (UL -1)	min. (UL -1)
Output voltage, high	max. 2 V	max. 2 V
Status indicator	Per channel, via LED, yellow	Per channel, via LED, yellow
Diagnostic display	Per channel, via LED, red	Per channel, via LED, red
Fieldbus		
Bus system	PROFINET V2.3, EtherNet/IP, EtherCAT, Multiprotocol	PROFINET V2.3, EtherNet/IP, EtherCAT, Multiprotocol
Transmission rate	10/100 MBit/s	10/100 MBit/s
Addressing	Via rotary coding switch, DCP	Via rotary coding switch, DCP
General data		
L x W x H	200 mm / 59.6 mm / 17.6 mm	200 mm / 59.6 mm / 17.6 mm
Earth	500 g	500 g
Protection degree	IP67	IP67
Operating temperature	-20...70 °C	-20...70 °C
Housing main material / UL 94 flammability rating	Zinc diecast / UL 94	Zinc diecast / UL 94
Note	Download the configuration files from www.weidmueller.com	Download the configuration files from www.weidmueller.com

Ordering data

Module variants	Type	Qty.	Order No.	Type	Qty.	Order No.
8 digital inputs / 8 digital outputs	UR67-MP-HP-8DIDO-12-60M	1	**2426290000**			
16 universal channels				UR67-MP-HP-16DIO-12-60M	1	**2512840000**
Note						

Accessories

	Type	Qty.	Order No.	Type	Qty.	Order No.
M12 sensor cable	SAIL-M12G-5-1.5U	1	**9457610150**	SAIL-M12G-5-1.5U	1	**9457610150**
M12 sensor cable	SAIL-M12W-5-1.5U	1	**9457670150**	SAIL-M12W-5-1.5U	1	**9457670150**
Bus cable	IE-C5DD4UG0015MCSA20-E	1	**1044470015**	IE-C5DD4UG0015MCSA20-E	1	**1044470015**
Bus cable	IE-C5DD4UG0015MCSMCS-E	1	**1025950015**	IE-C5DD4UG0015MCSMCS-E	1	**1025950015**
Markers	ESG-M 8/20 MC NE WS	200	**1027290000**	ESG-M 8/20 MC NE WS	200	**1027290000**
Plug						
Metal plug Ethernet, Male M12, D-coded, straight	SAISM-4/8S-M12-4P D-COD	1	**1892120000**	SAISM-4/8S-M12-4P D-COD	1	**1892120000**
Note	Further cables can be found at the end of this chapter.			Further cables can be found at the end of this chapter.		

Multiprotocol

Remote I/O for digital signal conditioning

PROFINET EtherCAT EtherNet/IP Multiprotocol

	UR67-MP-78-16DI-12-60M	UR67-MP-78-16DO-12-60M

Technical data

Connections		
Fieldbus (BUS-IN)	1x M12 female 4-pole, D-coded	1x M12 female 4-pole, D-coded
Fieldbus (BUS-OUT)	1x M12 female 4-pole, D-coded	1x M12 female 4-pole, D-coded
Supply voltage (AUX-IN)	1x 7/8" plug 5-pole	1x 7/8" plug 5-pole
Supply voltage (AUX-OUT)	1x 7/8" socket 5-pole	1x 7/8" socket 5-pole
I/O connections	8 x M12 socket 5-pole, A-coded	8 x M12 socket 5-pole, A-coded
Supply voltage		
Operating voltage	24 V (18 V DC ... 30 V DC)	24 V (18 V DC ... 30 V DC)
Power consumption of module electronics	100 mA typical	100 mA typical
Digital inputs		
Input current, low	Type 1 in acc. with IEC 61131-2	
Input current, high	Type 1 in acc. with IEC 61131-2	
Status indicator	Per channel, via LED, yellow	
Diagnostic display	Per channel, via LED, red	
Digital outputs		
max. current-carrying capacity per output signal		2 A
Output voltage, low		min. (UL -1)
Output voltage, high		max. 2 V
Max. total current outputs		9 A (12 A see manual)
Status indicator		Per channel, via LED, yellow
Diagnostic display		Per channel, via LED, red
Fieldbus		
Bus system	PROFINET V2.3, EtherNet/IP, EtherCAT, Multiprotocol	PROFINET V2.3, EtherNet/IP, EtherCAT, Multiprotocol
Transmission rate	10/100 MBit/s	10/100 MBit/s
Addressing	Via rotary coding switch, DCP	Via rotary coding switch, DCP
General data		
L x W x H	206 mm / 59.6 mm / 17.3 mm	206 mm / 59.6 mm / 17.3 mm
Earth	520 g	520 g
Protection degree	IP67	IP67
Operating temperature	-20...70 °C	-20...70 °C
Housing main material / UL 94 flammability rating	Zinc diecast / UL 94	Zinc diecast / UL 94
Note	Download the configuration files from www.weidmueller.com	Download the configuration files from www.weidmueller.com

Ordering data

Module variants	Type	Qty.	Order No.	Type	Qty.	Order No.
16 digital inputs	UR67-MP-78-16DI-12-60M	1	**2426300000**			
16 digital out				UR67-MP-78-16DO-12-60M	1	**2426310000**
Note						

Accessories

	Type	Qty.	Order No.	Type	Qty.	Order No.
M12 sensor cable	SAIL-M12G-5-1.5U	1	**9457610150**	SAIL-M12G-5-1.5U	1	**9457610150**
M12 sensor cable	SAIL-M12W-5-1.5U	1	**9457670150**	SAIL-M12W-5-1.5U	1	**9457670150**
Bus cable	IE-C5DD4UG0015MCSMCS-E	1	**1025950015**	IE-C5DD4UG0015MCSMCS-E	1	**1025950015**
Markers	ESG-M 8/20 MC NE WS	200	**1027290000**	ESG-M 8/20 MC NE WS	200	**1027290000**
Note	Further cables can be found at the end of this chapter.			Further cables can be found at the end of this chapter.		

Multiprotocol

Remote I/O for digital signal conditioning

PROFINET · EtherCAT · EtherNet/IP · Multiprotocol

	UR67-MP-78-16DIO-12-60M	UR67-MP-78-8DIDO-12-60M

Technical data

Connections		
Fieldbus (BUS-IN)	1x M12 female 4-pole, D-coded	1x M12 female 4-pole, D-coded
Fieldbus (BUS-OUT)	1x M12 female 4-pole, D-coded	1x M12 female 4-pole, D-coded
Supply voltage (AUX-IN)	1x 7/8" plug 5-pole	1x 7/8" plug 5-pole
Supply voltage (AUX-OUT)	1x 7/8" socket 5-pole	1x 7/8" socket 5-pole
I/O connections	8 x M12 socket 5-pole, A-coded	8 x M12 socket 5-pole, A-coded
Supply voltage		
Operating voltage	24 V (18 V DC ... 30 V DC)	24 V (18 V DC ... 30 V DC)
Power consumption of module electronics	100 mA typical	100 mA typical
Digital inputs		
Input current, low	Type 1 in acc. with IEC 61131-2	Type 1 in acc. with IEC 61131-2
Input current, high	Type 1 in acc. with IEC 61131-2	Type 1 in acc. with IEC 61131-2
Status indicator	Per channel, via LED, yellow	Per channel, via LED, yellow
Diagnostic display	Per channel, via LED, red	Per channel, via LED, red
Digital outputs		
max. current-carrying capacity per output signal	2 A	2 A
Output voltage, low	min. (UL -1)	min. (UL -1)
Output voltage, high	max. 2 V	max. 2 V
Max. total current outputs	9 A (12 A see manual)	9 A (12 A see manual)
Status indicator	Per channel, via LED, yellow	Per channel, via LED, yellow
Diagnostic display	Per channel, via LED, red	Per channel, via LED, red
Fieldbus		
Bus system	PROFINET V2.3, EtherNet/IP, EtherCAT, Multiprotocol	PROFINET V2.3, EtherNet/IP, EtherCAT, Multiprotocol
Transmission rate	10/100 MBit/s	10/100 MBit/s
Addressing	Via rotary coding switch, DCP	Via rotary coding switch, DCP
General data		
L x W x H	206 mm / 59.6 mm / 17.3 mm	206 mm / 59.6 mm / 17.3 mm
Earth	500 g	520 g
Protection degree	IP67	IP67
Operating temperature	-20...70 °C	-20...70 °C
Housing main material / UL 94 flammability rating	Zinc diecast / UL 94	Zinc diecast / UL 94
Note	Download the configuration files from www.weidmueller.com	Download the configuration files from www.weidmueller.com

Ordering data

Module variants	Type	Qty.	Order No.	Type	Qty.	Order No.
16 universal channels	UR67-MP-78-16DIO-12-60M	1	**2512830000**			
8 digital inputs / 8 digital outputs				UR67-MP-78-8DIDO-12-60M	1	**2426320000**
Note						

Accessories

	Type	Qty.	Order No.	Type	Qty.	Order No.
M12 sensor cable	SAIL-M12G-5-1.5U	1	**9457610150**	SAIL-M12G-5-1.5U	1	**9457610150**
M12 sensor cable	SAIL-M12W-5-1.5U	1	**9457670150**	SAIL-M12W-5-1.5U	1	**9457670150**
Bus cable	IE-C5DD4UG0015MCSMCS-E	1	**1025950015**	IE-C5DD4UG0015MCSMCS-E	1	**1025950015**
Markers	ESG-M 8/20 MC NE WS	200	**1027290000**	ESG-M 8/20 MC NE WS	200	**1027290000**
Note	Further cables can be found at the end of this chapter.			Further cables can be found at the end of this chapter.		

PROFINET

Remote I/O for digital signal conditioning

	UR67-PN-V14-CU-8DIDO-12	UR67-PN-V14-CU-16DI-12

Technical data

Module variants		
Module variants	8 digital inputs, 8 digital outputs	16 digital inputs
Connections		
Fieldbus (BUS-IN)	V14 PushPull RJ45	V14 PushPull RJ45
Fieldbus (BUS-OUT)	V14 PushPull RJ45	V14 PushPull RJ45
Supply voltage (AUX-IN)	PushPull-Power	PushPull-Power
Supply voltage (AUX-OUT)	PushPull-Power	PushPull-Power
I/O connections	8 x M12 socket 5-pole, A-coded	8 x M12 socket 5-pole, A-coded
Supply voltage		
Operating voltage	24 V (18 V DC ... 30 V DC)	24 V (18 V DC ... 30 V DC)
Max. total current module	150 mA	150 mA
Digital inputs		
Number	8	16
Input type	P-switching, Type 2 in acc. with IEC 61131-2	P-switching, Type 2 in acc. with IEC 61131-2
Input voltage, high	> 11 V	> 11 V
Input voltage, low	< 5 V	< 5 V
Sensor connection	2-wire, 3-wire + FE, M12, 5-pole	2-wire, 3-wire + FE, M12, 5-pole
Digital outputs		
Number	8	
Max. total current outputs	2 A per channel	
Switching frequency, resistive load	500 Hz	
Switching frequency, inductive load	0.2 Hz without free-wheeling diode, 500 Hz with suitable free-wheeling diode	
Switching frequency, lamp load	10 Hz	
Short-circuit proof	Yes	
Fieldbus		
Bus system	PROFINET V2.3	PROFINET V2.3
Addressing	DCP	DCP
Transmission rate	100 MBit/s	100 MBit/s
General data		
L x W x H	225 mm / 60 mm / 43 mm	225 mm / 60 mm / 43 mm
Weight	970 g	965 g
Protection degree	IP67	IP67
Operating temperature	-20...55 °C	-20...55 °C
Housing main material / UL 94 flammability rating	Zinc diecast / UL 94	Zinc diecast / UL 94
Note	Download the configuration files from www.weidmueller.com	Download the configuration files from www.weidmueller.com

Ordering data

Module variants	**Type**	**Qty.**	**Order No.**	**Type**	**Qty.**	**Order No.**
8 digital inputs / 8 digital outputs	UR67-PN-V14-CU-8DIDO-12	1	**2599670000**			
16 digital inputs				UR67-PN-V14-CU-16DI-12	1	**2599680000**
Note						

PROFINET

Remote I/O for digital signal conditioning

	UR67-PN-V14-POF-8DIDO-12	UR67-PN-V14-POF-16DI-12

Technical data

Module variants		
Module variants	8 digital inputs, 8 digital outputs	16 digital inputs
Connections		
Fieldbus (BUS-IN)	V14 PushPull SC-RJ POF	V14 PushPull SC-RJ POF
Fieldbus (BUS-OUT)	V14 PushPull SC-RJ POF	V14 PushPull SC-RJ POF
Supply voltage (AUX-IN)	PushPull-Power	PushPull-Power
Supply voltage (AUX-OUT)	PushPull-Power	PushPull-Power
I/O connections	8 x M12 socket 5-pole, A-coded	8 x M12 socket 5-pole, A-coded
Supply voltage		
Operating voltage	24 V (18 V DC ... 30 V DC)	24 V (18 V DC ... 30 V DC)
Max. total current module	150 mA	150 mA
Digital inputs		
Number	8	16
Input type	P-switching, Type 2 in acc. with IEC 61131-2	P-switching, Type 2 in acc. with IEC 61131-2
Input voltage, high	> 11 V	> 11 V
Input voltage, low	< 5 V	< 5 V
Sensor connection	2-wire, 3-wire + FE, M12, 5-pole	2-wire, 3-wire + FE, M12, 5-pole
Digital outputs		
Number	8	
Max. total current outputs	2 A per channel	
Switching frequency, resistive load	500 Hz	
Switching frequency, inductive load	0.2 Hz without free-wheeling diode, 500 Hz with suitable free-wheeling diode	
Switching frequency, lamp load	10 Hz	
Short-circuit proof	Yes	
Fieldbus		
Bus system	PROFINET V2.3	PROFINET V2.3
Addressing	DCP	DCP
Transmission rate	100 MBit/s	100 MBit/s
General data		
L x W x H	225 mm / 60 mm / 51 mm	225 mm / 60 mm / 51 mm
Weight	1000 g	995 g
Protection degree	IP67	IP67
Operating temperature	-20...55 °C	-20...55 °C
Housing main material / UL 94 flammability rating	Zinc diecast / UL 94	Zinc diecast / UL 94
Note	Download the configuration files from www.weidmueller.com	Download the configuration files from www.weidmueller.com

Ordering data

Module variants	**Type**	**Qty.**	**Order No.**	**Type**	**Qty.**	**Order No.**
8 digital inputs / 8 digital outputs	UR67-PN-V14-POF-8DIDO-12	1	**2599690000**			
16 digital out				UR67-PN-V14-POF-16DI-12	1	**2599700000**
Note						

u-remote IP67 PROFIBUS-DP modules

M12 or 7/8" power feed; 30 & 60 mm wide housing

PROFIBUS is with more than 60 million devices worldwide the most common fieldbus. In the manufacturing industry PROFIBUS-DP is used for communication between the controller and sensors or actuators in the field.
PROFIBUS allows simple and cost-saving topologies, bidirectional communication, extensive information and diagnostic features and a standardized integration the devices or device functions via device description files (GSD).

Adapt flexibly to the installation situation

Modules with 30 mm or 60 mm width and three housing variations for a flexible and efficient installation space usage supports you in solving difficult installation situations.

Suitable for application requirements

Whether particularly robust due to a zinc die-cast housing and fully potted modules or particularly easy for moving Applications – with Weidmüller PROFIBUS-DP IP67 modules give you the choice!

Secure connection guaranteed

Using standardized voltage supply connections in 7/8" or M12 (A-coded) connection technique, with B-coded fieldbus connectors and M8 or M12 connectors in the I/O level, you are positioned safely in the world – not only regarding the degree of protection but also supply security!

Channel-specific diagnostics

In case of maintenance work or if a fault occurs mostly every second counts – by a channel wise diagnosis based on LEDs and marking fields by each connection point you are ideally placed!

PROFIBUS

Remote I/O for digital signal conditioning

UR67-PB-12-8DI-8-30K

UR67-PB-12-8DIO-8-30K

Technical data

Connections		
Fieldbus (BUS-IN)	1x M12 plug 5-pole, B-coded	1x M12 plug 5-pole, B-coded
Fieldbus (BUS-OUT)	1x M12 female 5-pole, B-coded	1x M12 female 5-pole, B-coded
Supply voltage (AUX-IN)	1x M12 plug 5-pole	1x M12 plug 5-pole
I/O connections	8 x M8 socket 3-pole	8 x M8 socket 3-pole
Supply voltage		
Operating voltage	24 V (18 V DC ... 30 V DC)	24 V (18 V DC ... 30 V DC)
Power consumption of module electronics	65 mA typical	65 mA typical
Digital inputs		
Input current, low	< 15 mA in accordance with EN 61131-2 Type 1	< 15 mA in accordance with EN 61131-2 Type 1
Input current, high	2 mA to 15 mA in accordance with EN 61131-2 Type 1	2 mA to 15 mA in accordance with EN 61131-2 Type 1
Input filter	1 ms	1 ms
Reverse polarity protection	Yes	Yes
Short-circuit protection (input)	Yes	Yes
Status indicator	Per channel, yellow	Per channel, yellow
Diagnostic display	Per channel, via LED, red	Per channel, via LED, red
Digital outputs		
max. current-carrying capacity per output signal		0.5 A
Output voltage, low		min. (UL -1)
Output voltage, high		max. 2 V
Max. total current outputs		4 A
Reverse polarity protection		Yes
Status indicator		Per channel, via LED, yellow
Diagnostic display		Per channel, via LED, red
Fieldbus		
Bus system	Profibus-DP	Profibus-DP
Transmission rate	max. 12 Mbps (automatic detection)	max. 12 Mbps (automatic detection)
Addressing	Via rotary coding switch (1 – 126)	Via rotary coding switch (1 – 126)
General data		
L x W x H	205.4 mm / 30 mm / 40.4 mm	205.4 mm / 30 mm / 40.4 mm
Earth	200 g	200 g
Protection degree	IP67	IP67
Operating temperature	-10...60 °C	-10...60 °C
Housing main material / UL 94 flammability rating	PBT / UL 94	PBT / UL 94
Certificate	CE, cULus	CE, cULus
Note	Download the GSD files from www.weidmueller.com	Download the GSD files from www.weidmueller.com

Ordering data

Module variants	**Type**	**Qty.**	**Order No.**
8 digital in	UR67-PB-12-8DI-8-30K	1	**2426360000**
8 digital inputs / 8 digital outputs			
Note			

Type	**Qty.**	**Order No.**
UR67-PB-12-8DIO-8-30K	1	**2426330000**

Accessories

	Type	**Qty.**	**Order No.**
M8 sensor cable	SAIL-M8G-3-1.5U	1	**1824590150**
M8 sensor cable	SAIL-M8W-3-1.5U	1	**1857550150**
Markers	ESG 5/10 MC NE WS	400	**1919940000**
Note	Further cables can be found at the end of this chapter.		

Type	**Qty.**	**Order No.**
SAIL-M8G-3-1.5U	1	**1824590150**
SAIL-M8W-3-1.5U	1	**1857550150**
ESG 5/10 MC NE WS	400	**1919940000**
Further cables can be found at the end of this chapter.		

PROFIBUS

Remote I/O for digital signal conditioning

	UR67-PB-78-16DI-12-60K	UR67-PB-78-16DIO-12-60K

Technical data

Connections		
Fieldbus (BUS-IN)	1x M12 plug 5-pole, B-coded	1x M12 plug 5-pole, B-coded
Fieldbus (BUS-OUT)	1x M12 female 5-pole, B-coded	1x M12 female 5-pole, B-coded
Supply voltage (AUX-IN)	1x 7/8" plug 5-pole	1x 7/8" plug 5-pole
Supply voltage (AUX-OUT)	1x 7/8" socket 5-pole	1x 7/8" socket 5-pole
I/O connections	8 x M12 socket 5-pole, A-coded	8 x M12 socket 5-pole, A-coded
Supply voltage		
Operating voltage	24 V (18 V DC ... 30 V DC)	24 V (18 V DC ... 30 V DC)
Power consumption of module electronics	70 mA typical	70 mA typical
Digital inputs		
Input current, low	< 15 mA in accordance with EN 61131-2 Type 1	< 15 mA in accordance with EN 61131-2 Type 1
Input current, high	2 mA to 15 mA in accordance with EN 61131-2 Type 1	2 mA to 15 mA in accordance with EN 61131-2 Type 1
Input filter	1 ms	1 ms
Reverse polarity protection	Yes	Yes
Status indicator	Per channel, yellow	Per channel, yellow
Diagnostic display	Per channel, via LED, red, green	Per channel, via LED, red, green
Digital outputs		
Output voltage, low		max. 2 V
Output voltage, high		min. (UL -1)
Max. total current outputs		9 A
Reverse polarity protection		Yes
Status indicator		Per channel, via LED, yellow
Diagnostic display		Per channel, via LED, red, green
Fieldbus		
Bus system	Profibus-DP	Profibus-DP
Transmission rate	max. 12 Mbps (automatic detection)	max. 12 Mbps (automatic detection)
Addressing	Via rotary coding switch (1 – 126)	Via rotary coding switch (1 – 126)
General data		
L x W x H	243 mm / 60 mm / 39.5 mm	243 mm / 60 mm / 39.5 mm
Earth	380 g	380 g
Protection degree	IP67	IP67
Operating temperature	-10...60 °C	-10...60 °C
Housing main material / UL 94 flammability rating	PBT / UL 94	PBT / UL 94
Certificate	CE, cULus	CE, cULus
Note	Download the GSD files from www.weidmueller.com	Download the GSD files from www.weidmueller.com

Ordering data

Module variants	Type	Qty.	Order No.	Type	Qty.	Order No.
16 digital inputs	UR67-PB-78-16DI-12-60K	1	**2426370000**			
16 digital in / 16 digital out				UR67-PB-78-16DIO-12-60K	1	**2426340000**
Note						

Accessories

	Type	Qty.	Order No.	Type	Qty.	Order No.
M12 sensor cable	SAIL-M12W-5-1.5U	1	**9457670150**	SAIL-M12W-5-1.5U	1	**9457670150**
M12 sensor cable	SAIL-M12G-5-1.5U	1	**9457610150**	SAIL-M12G-5-1.5U	1	**9457610150**
Markers	ESG 9/20 MC NE WS	200	**1609940000**	ESG 9/20 MC NE WS	200	**1609940000**
Note	Further cables can be found at the end of this chapter.			Further cables can be found at the end of this chapter.		

PROFIBUS

Remote I/O for digital signal conditioning

UR67-PB-78-16DI-12-60M

UR67-PB-78-16DO-12-60M

Technical data

	UR67-PB-78-16DI-12-60M	UR67-PB-78-16DO-12-60M
Connections		
Fieldbus (BUS-IN)	1x M12 plug 5-pole, B-coded	1x M12 plug 5-pole, B-coded
Fieldbus (BUS-OUT)	1x M12 female 5-pole, B-coded	1x M12 female 5-pole, B-coded
Supply voltage (AUX-IN)	1x 7/8" plug 5-pole	1x 7/8" plug 5-pole
Supply voltage (AUX-OUT)	1x 7/8" socket 5-pole	1x 7/8" socket 5-pole
I/O connections	8 x M12 socket 5-pole, A-coded	8 x M12 socket 5-pole, A-coded
Supply voltage		
Operating voltage	24 V (18 V DC ... 30 V DC)	24 V (18 V DC ... 30 V DC)
Power consumption of module electronics	60 mA typical	60 mA typical
Digital inputs		
Input current, low	< 15 mA in accordance with EN 61131-2 Type 1	
Input current, high	2 mA to 15 mA in accordance with EN 61131-2 Type 1	
Input filter	3 ms	
Status indicator	Per channel, yellow, white	
Diagnostic display	Per channel, via LED, red	
Digital outputs		
Output voltage, low		max. 2 V
Output voltage, high		min. (UL -1)
Max. total current outputs		9 A
Reverse polarity protection		Yes
Status indicator		Per channel, via LED, yellow, white
Diagnostic display		Per channel, via LED, red
Fieldbus		
Bus system	Profibus-DP	Profibus-DP
Transmission rate	max. 12 Mbps (automatic detection)	max. 12 Mbps (automatic detection)
Addressing	Via rotary coding switch (1 – 126)	Via rotary coding switch (1 – 126)
General data		
L x W x H	264.7 mm / 59.6 mm / 31 mm	264.7 mm / 59.6 mm / 31 mm
Earth	615 g	615 g
Protection degree	IP67	IP67
Operating temperature	-10...60 °C	-10...60 °C
Housing main material / UL 94 flammability rating	Zinc diecast / UL 94	Zinc diecast / UL 94
Certificate	CE, cULus	CE, cULus
Note	Download the GSD files from www.weidmueller.com	Download the GSD files from www.weidmueller.com

Ordering data

Module variants	Type	Qty.	Order No.	Type	Qty.	Order No.
16 digital inputs	UR67-PB-78-16DI-12-60M	1	**2426390000**			
16 digital out				UR67-PB-78-16DO-12-60M	1	**2426400000**
Note						

Accessories

	Type	Qty.	Order No.	Type	Qty.	Order No.
M12 sensor cable	SAIL-M12W-5-1.5U	1	**9457670150**	SAIL-M12W-5-1.5U	1	**9457670150**
M12 sensor cable	SAIL-M12G-5-1.5U	1	**9457610150**	SAIL-M12G-5-1.5U	1	**9457610150**
Markers	ESG-M 8/20 MC NE WS	200	**1027290000**	ESG-M 8/20 MC NE WS	200	**1027290000**
Note	Further cables can be found at the end of this chapter.			Further cables can be found at the end of this chapter.		

PROFIBUS

Remote I/O for digital signal conditioning

UR67-PB-78-8DIDO-12-60M

Technical data

Connections	
Fieldbus (BUS-IN)	1x M12 plug 5-pole, B-coded
Fieldbus (BUS-OUT)	1x M12 female 5-pole, B-coded
Supply voltage (AUX-IN)	1x 7/8" plug 5-pole
Supply voltage (AUX-OUT)	1x 7/8" socket 5-pole
I/O connections	8 x M12 socket 5-pole, A-coded
Supply voltage	
Operating voltage	24 V (18 V DC ... 30 V DC)
Power consumption of module electronics	60 mA typical
Digital inputs	
Input current, low	< 15 mA in accordance with EN 61131-2 Type 1
Input current, high	2 mA to 15 mA in accordance with EN 61131-2 Type 1
Input filter	3 ms
Reverse polarity protection	Yes
Status indicator	Per channel, yellow
Diagnostic display	Per channel, via LED, red
Digital outputs	
Output voltage, low	max. 2 V
Output voltage, high	min. (UL -1)
Max. total current outputs	9 A
Reverse polarity protection	Yes
Status indicator	Per channel, via LED, yellow
Diagnostic display	Per channel, via LED, red
Fieldbus	
Bus system	Profibus-DP
Transmission rate	max. 12 Mbps (automatic detection)
Addressing	Via rotary coding switch (1 – 126)
General data	
L x W x H	264.7 mm / 59.6 mm / 31 mm
Earth	615 g
Protection degree	IP67
Operating temperature	-10...60 °C
Housing main material / UL 94 flammability rating	Zinc diecast / UL 94
Certificate	CE, cULus
Note	Download the GSD files from www.weidmueller.com

Ordering data

Module variants	Type	Qty.	Order No.
8 digital inputs / 8 digital outputs	UR67-PB-78-8DIDO-12-60M	1	2426380000
Note			

Accessories

	Type	Qty.	Order No.
M12 sensor cable	SAIL-M12W-5-1.5U	1	9457670150
M12 sensor cable	SAIL-M12G-5-1.5U	1	9457610150
Markers	ESG-M 8/20 MC NE WS	200	1027290000
Note	Further cables can be found at the end of this chapter.		

SAI Active Universal

Compact, basic versions of the Remote I/O system with IP67 protection

The SAI Active Universal consists of basic, compact designed variants that include a variety of modules for digital and analogue inputs and outputs. The housing has a sturdy construction in compliance with strict industrial requirements. It is resistant against aggressive materials, vibration, shock, temperature, water and dust.

The high quality connection system uses conventional, standardised M8 and M12 connectors. They ensure a reliable wiring process with less risk of errors.
Two M12 connections for the fieldbus allow for a continuous bus installation without any additional T-distributor. The functional earth connection is automatically created when installing on a metallic earthed base.

4 independent voltage circuits

The modules can be supplied with up to four different voltage potentials. The module voltage can be simultaneously used for the inputs. In addition, up to three feed points are available for outputs; these can be switched off individually depending on the application requirements. Plug in cross connectors can be used to merge voltage potentials on the module.

Efficient diagnostics and status alerts

The status of the I/Os is shown directly on the module using arrow icons. The arrows point to the label and the plug in position. Up to seven status LEDs are available for displaying additional information about the power supply, fieldbus status and group diagnostics. The information is simultaneously transmitted to the controller unit via the bus system.

DeviceNet

CANopen

Freedom of choice

Total compliance with industrial fieldbus standards: this permits integration with all conventional controllers so that the modules can be used in practically all applications.
SAI Active Universal supports CANopen and DeviceNet™ communication protocols.

M8 Analogue Digital M12

A wide variety of variants

All SAI Active modules with digital inputs or digital outputs are optionally available with standard M8 or M12 connection systems. For modules in the 16DI/8DO series, the configuration can be customised to fit the application so that anywhere between 16DI to 8DI/8DO can be used. Output cables with up to 2 A per channel are used to connect almost any load. Analogue modules can be configured flexibly for the current of voltage outputs.

CANopen
Remote I/O for digital signal conditioning

CANopen

SAI-AU

SAI-AU

Technical data

Connections		
Fieldbus (BUS-IN)	1x M12 plug 5-pole, A-coded	1x M12 plug 5-pole, A-coded
Fieldbus (BUS-OUT)	1x M12 female 5-pole, A-coded	1x M12 female 5-pole, A-coded
Supply voltage (AUX-IN)	2x M12 plug 5-pole, A-coded	1x M12 plug 5-pole, A-coded
Supply voltage (AUX-OUT)		1x M12 female 5-pole, A-coded
I/O connections	16 x M8 socket 3-pole / 8 x M12 socket 5-pole, A-coded	16 x M8 socket 3-pole / 8 x M12 socket 5-pole, A-coded
Supply voltage		
Operating voltage	24 V (18 V DC ... 30 V DC)	24 V (18 V DC ... 30 V DC)
Contact load	Per PIN max. 4 A	Per PIN max. 4 A
Max. total current module	8 A	8 A
Digital inputs		
Permitted input voltage	-30 V to +30 V (protected against polarity reversal)	-30 V to +30 V (protected against polarity reversal)
Input voltage, low	<5 V in accordance with EN 61131-2 Type 1	<5 V in accordance with EN 61131-2 Type 1
Input voltage, high	>15 V in accordance with EN 61131-2 Type 1	>15 V in accordance with EN 61131-2 Type 1
Input current, low	< 15 mA in accordance with EN 61131-2 Type 1	< 15 mA in accordance with EN 61131-2 Type 1
Input current, high	2 mA to 15 mA in accordance with EN 61131-2 Type 1	2 mA to 15 mA in accordance with EN 61131-2 Type 1
Input filter	3 ms	3 ms
Digital outputs		
max. current-carrying capacity per output signal	0.5 A, 2 A	
Switching frequency load (resistive / inductive / inrush)	max. 100 Hz / max. 1 Hz / max. 8 Hz	
Short-circuit proof	Yes, cut-off for short circuit and error message	
Output voltage, low	0 V DC	
Output voltage, high	Supply voltage less 0.7 V DC	
Max. total current of outputs	7 A, 8 A	
Fieldbus		
Bus system	CANopen	CANopen
Transmission rate	Max. 1 Mbps (automatic detection)	Max. 1 Mbps (automatic detection)
Addressing	Via rotary coding switch (1 – 127)	Via rotary coding switch (1 – 127)
System integration	EDS file (Device-specific for each module)	EDS file (Device-specific for each module)
General data		
L x W x H	210 mm / 54 mm / 32 mm	210 mm / 54 mm / 32 mm
Earth	< 400 g	< 400 g
Protection degree	IP67	IP67
Operating temperature	0...60 °C	0...60 °C
Storage temperature	-25 °C...85 °C	-25 °C...85 °C
Housing main material / UL 94 flammability rating	Pocan, PBT / V-0	Pocan, PBT / V-0
Certificate	CE, cULus	CE, cULus
Note	Download the EDS files from www.weidmueller.com	Download the EDS files from www.weidmueller.com

Ordering data

Module variants	Type	Qty.	Order No.	Type	Qty.	Order No.
16 digital inputs; 16 digital inputs / 8 digital outputs	SAI-AU M8 CAN 16DI/8DO	1	**1906690000**	SAI-AU M8 CAN 16DI	1	**1906680000**
16 digital inputs; 16 digital inputs / 8 digital outputs	SAI-AU M12 CAN 16DI/8DO	1	**1906660000**	SAI-AU M12 CAN 16DI	1	**1906650000**
Note						

Accessories

Plug	Type	Qty.	Order No.	Type	Qty.	Order No.
Terminating resistor in M12 plug	SAIEND CAN-M12 5P A-COD	1	**1784760000**	SAIEND CAN-M12 5P A-COD	1	**1784760000**
Metal plug, Male M12, 5-pole, shield A-coded	SAIS-M-5/8S M12 5P A-COD	1	**1784740000**	SAIS-M-5/8S M12 5P A-COD	1	**1784740000**
Metal plug, Socket M12, 5-pole, shield A-coded	SAIB-M-5/8S M12 5P A-COD	1	**1784750000**	SAIB-M-5/8S M12 5P A-COD	1	**1784750000**
Miscellaneous accessories						
Marker, transparent	ESG 8/13.5/43.3 SAI AU	5	**1912130000**	ESG 8/13.5/43.3 SAI AU	5	**1912130000**
M12 protective cap	SAI-SK-M12-UNI 2029	20	**2330260000**	SAI-SK-M12-UNI 2029	20	**2330260000**
M8 protective cap	SAI-SK M8	50	**1802760000**	SAI-SK M8	50	**1802760000**
Note	Further cables can be found at the end of this chapter.			Further cables can be found at the end of this chapter.		

CANopen
Remote I/O for digital and analogue signal conditioning

CANopen

SAI-AU

Technical data

Connections	
Fieldbus (BUS-IN)	1x M12 plug 5-pole, A-coded
Fieldbus (BUS-OUT)	1x M12 female 5-pole, A-coded
Supply voltage (AUX-IN)	1x M12 plug 5-pole, A-coded
Supply voltage (AUX-OUT)	1x M12 female 5-pole, A-coded
I/O connections	
Supply voltage	
Operating voltage	24 V (18 V DC ... 30 V DC)
Contact load	Per PIN max. 4 A
Max. total current module	8 A
Digital inputs	
Permitted input voltage	-30 V to +30 V (protected against polarity reversal)
Input voltage, low	<5 V in accordance with EN 61131-2 Type 1
Input voltage, high	>15 V in accordance with EN 61131-2 Type 1
Input current, low	< 15 mA in accordance with EN 61131-2 Type 1
Input current, high	2 mA to 15 mA in accordance with EN 61131-2 Type 1
Input filter	3 ms
Digital outputs	
max. current-carrying capacity per output signal	
Switching frequency load (resistive / inductive / inrush)	
Short-circuit proof	
Output voltage, low	
Output voltage, high	
Max. total current of outputs	
Fieldbus	
Bus system	CANopen
Transmission rate	Max. 1 Mbps (automatic detection)
Addressing	Via rotary coding switch (1 – 127)
System integration	EDS file (Device-specific for each module)
General data	
L x W x H	210 mm / 54 mm / 32 mm
Earth	< 400 g
Protection degree	IP67
Operating temperature	0...60 °C
Storage temperature	-25 °C...85 °C
Housing main material / UL 94 flammability rating	Pocan, PBT / V-0
Certificate	CE, cULus
Note	Download the EDS files from www.weidmueller.com

Ordering data

Module variants	Type	Qty.	Order No.
4 analogue inputs / 2 analogue outputs / 4 digital inputs	SAI-AU M12 CAN AI/AO/DI	1	1906670000
Note			

Accessories

Plug	Type	Qty.	Order No.
Terminating resistor in M12 plug	SAIEND CAN-M12 5P A-COD	1	1784760000
Metal plug, Male M12, 5-pole, shield A-coded	SAIS-M-5/8S M12 5P A-COD	1	1784740000
Metal plug, Socket M12, 5-pole, shield A-coded	SAIB-M-5/8S M12 5P A-COD	1	1784750000
Miscellaneous accessories			
Marker, transparent	ESG 8/13.5/43.3 SAI AU	5	1912130000
M12 protective cap	SAI-SK-M12-UNI 2029	20	2330260000
M8 protective cap	SAI-SK M8	50	1802760000
Note	Further cables can be found at the end of this chapter.		

DeviceNet™
Remote I/O for digital signal conditioning

DeviceNet™

SAI-AU

SAI-AU

Technical data

Connections		
Fieldbus (BUS-IN)	1x M12 plug 5-pole, A-coded	1x M12 plug 5-pole, A-coded
Fieldbus (BUS-OUT)	1x M12 female 5-pole, A-coded	1x M12 female 5-pole, A-coded
Supply voltage (AUX-IN)	1x M12 plug 5-pole, A-coded	2x M12 plug 5-pole, A-coded
Supply voltage (AUX-OUT)	1x M12 female 5-pole, A-coded	
I/O connections	16 x M8 socket 3-pole / 8 x M12 socket 5-pole, A-coded	16 x M8 socket 3-pole / 8 x M12 socket 5-pole, A-coded
Supply voltage		
Operating voltage	24 V (18 V DC ... 30 V DC)	24 V (18 V DC ... 30 V DC)
Contact load	Per PIN max. 4 A	Per PIN max. 4 A
Max. total current module	8 A	8 A
Digital inputs		
Permitted input voltage	-30 V to +30 V (protected against polarity reversal)	-30 V to +30 V (protected against polarity reversal)
Input voltage, low	<5 V in accordance with EN 61131-2 Type 1	<5 V in accordance with EN 61131-2 Type 1
Input voltage, high	>15 V in accordance with EN 61131-2 Type 1	>15 V in accordance with EN 61131-2 Type 1
Input current, low	< 15 mA in accordance with EN 61131-2 Type 1	< 15 mA in accordance with EN 61131-2 Type 1
Input current, high	2 mA to 15 mA in accordance with EN 61131-2 Type 1	2 mA to 15 mA in accordance with EN 61131-2 Type 1
Input filter	3 ms	3 ms
Digital outputs		
max. current-carrying capacity per output signal		0.5 A, 2 A
Switching frequency load (resistive / inductive / inrush)		max. 100 Hz / max. 1 Hz / max. 8 Hz
Short-circuit proof		Yes, cut-off for short circuit and error message
Output voltage, low		0 V DC
Output voltage, high		Supply voltage less 0.7 V DC
Max. total current of outputs		7 A, 8 A
Fieldbus		
Bus system	DeviceNet	DeviceNet
Transmission rate	max. 500 kBit/s (automatic detection)	max. 500 kBit/s (automatic detection)
Addressing	Via rotary coding switch (0 – 63)	Via rotary coding switch (0 – 63)
System integration	EDS file (Device-specific for each module)	EDS file (Device-specific for each module)
General data		
L x W x H	210 mm / 54 mm / 32 mm	210 mm / 54 mm / 32 mm
Earth	< 400 g	< 400 g
Protection degree	IP67	IP67
Operating temperature	0...60 °C	0...60 °C
Storage temperature	-25 °C...85 °C	-25 °C...85 °C
Housing main material / UL 94 flammability rating	Pocan, PBT / V-0	Pocan, PBT / V-0
Certificate	CE, cULus	CE, cULus
Note	Download the EDS files from www.weidmueller.com	Download the EDS files from www.weidmueller.com

Ordering data

Module variants	Type	Qty.	Order No.	Type	Qty.	Order No.
16 digital inputs; 16 digital inputs / 8 digital outputs	SAI-AU M8 DN 16DI	1	**1906730000**	SAI-AU M8 DN 16DI/8DO	1	**1906740000**
16 digital inputs; 16 digital inputs / 8 digital outputs	SAI-AU M12 DN 16DI	1	**1906700000**	SAI-AU M12 DN 16DI/8DO	1	**1906710000**
Note						

Accessories

Plug	Type	Qty.	Order No.	Type	Qty.	Order No.
Terminating resistor in M12 plug	SAIEND CAN-M12 5P A-COD	1	**1784760000**	SAIEND CAN-M12 5P A-COD	1	**1784760000**
Metal plug, Male M12, 5-pole, shield A-coded	SAIS-M-5/8S M12 5P A-COD	1	**1784740000**	SAIS-M-5/8S M12 5P A-COD	1	**1784740000**
Metal plug, Socket M12, 5-pole, shield A-coded	SAIB-M-5/8S M12 5P A-COD	1	**1784750000**	SAIB-M-5/8S M12 5P A-COD	1	**1784750000**
Miscellaneous accessories						
Marker, transparent	ESG 8/13.5/43.3 SAI AU	5	**1912130000**	ESG 8/13.5/43.3 SAI AU	5	**1912130000**
M12 protective cap	SAI-SK-M12-UNI 2029	20	**2330260000**	SAI-SK-M12-UNI 2029	20	**2330260000**
M8 protective cap	SAI-SK M8	50	**1802760000**	SAI-SK M8	50	**1802760000**
Note	Further cables can be found at the end of this chapter.			Further cables can be found at the end of this chapter.		

DeviceNet™
Remote I/O for digital and analogue signal conditioning

DeviceNet™

SAI-AU

Technical data

Connections	
Fieldbus (BUS-IN)	1x M12 plug 5-pole, A-coded
Fieldbus (BUS-OUT)	1x M12 female 5-pole, A-coded
Supply voltage (AUX-IN)	1x M12 plug 5-pole, A-coded
Supply voltage (AUX-OUT)	1x M12 female 5-pole, A-coded
I/O connections	8 x M12 socket 5-pole, A-coded
Supply voltage	
Operating voltage	24 V (18 V DC ... 30 V DC)
Contact load	Per PIN max. 4 A
Max. total current module	8 A
Digital inputs	
Permitted input voltage	-30 V to +30 V (protected against polarity reversal)
Input voltage, low	<5 V in accordance with EN 61131-2 Type 1
Input voltage, high	>15 V in accordance with EN 61131-2 Type 1
Input current, low	< 15 mA in accordance with EN 61131-2 Type 1
Input current, high	2 mA to 15 mA in accordance with EN 61131-2 Type 1
Input filter	3 ms
Analogue inputs	
Measurement range	-10 V ... +10 V, 0 V ... 10V, 0 ... 20 mA, 4...20 mA
Maximum input voltage in relation to GND	35 V
Input resistance (load)	<125 Ohm
Max. input current (differential)	-50 mA to +50 mA (protected against polarity reversal)
Short-circuit proof	Yes
Resolution / Precision	12-bit / < 0.2 %
Analogue outputs	
Measurement range	-10 V ... +10 V, 0 V ... 10V, 0 ... 20 mA, 4...20 mA
Output interval	5 ms to 250 ms (can be configured)
Short-circuit proof	Yes
Resolution / Precision	12-bit / < 0.2 %
Fieldbus	
Bus system	DeviceNet
Transmission rate	max. 500 kBit/s (automatic detection)
Addressing	Via rotary coding switch (0 – 63)
System integration	EDS file (Device-specific for each module)
General data	
L x W x H	210 mm / 54 mm / 32 mm
Earth	< 400 g
Protection degree	IP67
Operating temperature	0...60 °C
Storage temperature	-25 °C...85 °C
Housing main material / UL 94 flammability rating	Pocan, PBT / V-0
Certificate	CE, cULus
Note	Download the EDS files from www.weidmueller.com

Ordering data

Module variants	Type	Qty.	Order No.
4 analogue inputs / 2 analogue outputs / 4 digital inputs	SAI-AU M12 DN AI/AO/DI	1	1906720000
Note			

Accessories

Plug	Type	Qty.	Order No.
Terminating resistor in M12 plug	SAIEND CAN-M12 5P A-COD	1	1784760000
Metal plug, Male M12, 5-pole, shield A-coded	SAIS-M-5/8S M12 5P A-COD	1	1784740000
Metal plug, Socket M12, 5-pole, shield A-coded	SAIB-M-5/8S M12 5P A-COD	1	1784750000
Miscellaneous accessories			
Marker, transparent	ESG 8/13.5/43.3 SAI AU	5	1912130000
M12 protective cap	SAI-SK-M12-UNI 2029	20	2330260000
M8 protective cap	SAI-SK M8	50	1802760000
Note	Further cables can be found at the end of this chapter.		

SAI Active Universal Pro

Professional versions of the Remote I/O System featuring IP67 protection

The modules in the SAI Active Universal Pro systems provide additional I/O and functional modules for more versatile topologies. The extension modules come in a compact, space-saving design. They can also be mounted on the side because of the additional drilled holes in the side of the housing. Up to 15 extension modules can be connected over a distance of 50 metres using a shielded, standard M8 sensor cable and the SAI fieldbus module or the IP20 master module UR20-1COM-SAI-PRO.

In addition to the digital input and output modules, we also offer counter unit modules, thermal modules, RTD modules and analogue modules. The digital input and output modules are also available in M8 and M12 variants. The analogue modules and functional modules are available with M12 connections. Markers are included with every SAI Active module for labelling the I/O channels and the entire device. These markers can be printed on using the PrintJet system from Weidmüller.

Cost-effective Subbus system

Subbus modules are wired up using conventional, shielded, standard M8 sensor cables. Thus there is no need for expensive custom cables. The extension modules enable versatile expansion and minimise the costs associated with the fieldbus interface. The modules do not, however, detract from the performance of the fieldbus system.

Simplified installation

The modules have a compact, space-saving design with additional holes drilled on the side of the housing: this allows them to be installed in a quick and versatile manner. All SAI Active modules with digital inputs or digital outputs are optionally available with standard M8 or M12 connection systems. The outputs are short-circuit-proof and protected against polarity reversal.

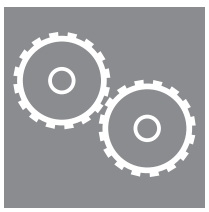

Efficient engineering

All Pro-System modules are described in the standardised fieldbus specific device description files. They can be integrated into any controller unit and corresponding engineering system regardless of the particular manufacturer. The configuration (whether for the input, DESINA input, or output) is carried out without any additional software. Any user can configure directly from the engineering system.

Gateway modules with digital inputs

DeviceNet™

SAI-AU GW

UR20-1COM-SAI-PRO

Technical data

Connections	
Fieldbus (BUS-IN)	1x M12 plug 5-pole, A-coded
Fieldbus (BUS-OUT)	1x M12 female 5-pole, A-coded
Supply voltage (AUX-IN)	1x M12 plug 5-pole, A-coded
Connection to Subbus (SUB-OUT)	1 x M8 female 4-pole, A-coded
I/O connections	8 x M12 socket 5-pole, A-coded
Supply voltage	
Operating voltage	24 V (18 V DC ... 30 V DC)
Contact load	Per PIN max. 4 A
Max. total current module	8 A
Digital inputs	
Permitted input voltage	-30 V to +30 V (protected against polarity reversal)
Input voltage, low	<5 V in accordance with EN 61131-2 Type 1
Input voltage, high	>15 V in accordance with EN 61131-2 Type 1
Input current, low	< 15 mA in accordance with EN 61131-2 Type 1
Input current, high	2 mA to 15 mA in accordance with EN 61131-2 Type 1
Input filter	1 ms, 3 ms, 5 ms, 10 ms, configurable
Fieldbus	
Bus system	DeviceNet
Transmission rate	max. 500 kBit/s (automatic detection)
Addressing	Via rotary coding switch (0 – 63)
System integration	EDS file
General data	
L x W x H	210 mm / 54 mm / 32 mm
Earth	< 350 g
Protection degree	IP67
Operating temperature	0...60 °C
Storage temperature	-25 °C...85 °C
Housing main material / UL 94 flammability rating	Pocan, PBT / V-0
Certificate	CE, cULus
Note	Download the EDS files from www.weidmueller.com

Type	Qty.	Order No.
UR20-1COM-SAI-PRO	1	2007430000

Note: Technical data for this product can be found in Chapter B.

Ordering data

Module variants	Type	Qty.	Order No.
16 digital inputs	SAI-AU M12 DN GW 16DI	1	1938570000
Note			

Accessories

Miscellaneous accessories	Type	Qty.	Order No.
Marker, transparent	ESG 8/13.5/43.3 SAI AU	5	1912130000
M12 protective cap	SAI-SK-M12-UNI 2029	20	2330260000
Note	Further cables can be found at the end of this chapter.		

Subbus modules with digital input/outputs

SAI-AU Digital

SAI-AU Digital

Technical data

Connections		
Supply voltage (AUX-IN)		1x M12 plug 5-pole, A-coded
Connection to Subbus (SUB-IN)	1 x M8 plug 4-pole, A-coded	1 x M8 plug 4-pole, A-coded
Connection to Subbus (SUB-OUT)	1 x M8 female 4-pole, A-coded	1 x M8 female 4-pole, A-coded
I/O connections	8 x M8 socket 3-pole	8 x M8 socket 3-pole
Supply voltage		
Operating voltage	24 V (18 V DC ... 30 V DC)	24 V (18 V DC ... 30 V DC)
Contact load		Per PIN max. 4 A
Max. total current module		8 A
Digital inputs		
Permitted input voltage	-30 V to +30 V (protected against polarity reversal)	-30 V to +30 V (protected against polarity reversal)
Input voltage, low	<5 V in accordance with EN 61131-2 Type 1	<5 V in accordance with EN 61131-2 Type 1
Input voltage, high	>15 V in accordance with EN 61131-2 Type 1	>15 V in accordance with EN 61131-2 Type 1
Input current, low	< 15 mA in accordance with EN 61131-2 Type 1	< 15 mA in accordance with EN 61131-2 Type 1
Input current, high	2 mA to 15 mA in accordance with EN 61131-2 Type 1	2 mA to 15 mA in accordance with EN 61131-2 Type 1
Input filter	1 ms, 3 ms, 5 ms, 10 ms, configurable	1 ms, 3 ms, 5 ms, 10 ms, configurable
Separation of potentials to module electronics	none	none
Digital outputs		
max. current-carrying capacity per output signal		0.5 A
Separation of potentials to module electronics		none
Switching frequency, resistive load		max. 100 Hz
Switching frequency, inductive load		max. 1 Hz
Switching frequency, lamp load		max. 8 Hz
Short-circuit proof		Yes, cut-off for short circuit and error message
Output voltage, low		0 V DC
Output voltage, high		Supply voltage less 0.7 V DC
Max. total current outputs		4 A
Fieldbus		
Bus system	Subbus	Subbus
Addressing	automatic	automatic
System integration	automatic	automatic
General data		
L x W x H	155 mm / 30 mm / 32 mm	180 mm / 30 mm / 32 mm
Earth	< 200 g	< 200 g
Protection degree	IP67	IP67
Operating temperature	0...60 °C	0...60 °C
Storage temperature	-25 °C...85 °C	-25 °C...85 °C
Housing main material / UL 94 flammability rating	Pocan, PBT / 5VA	Pocan, PBT / 5VA
Certificate	CE, cULus	CE, cULus
Note		

Ordering data

Module variants	Type	Qty.	Order No.	Type	Qty.	Order No.
8 digital in; 8 digital in / 8 digital out	SAI-AU M8 SB 8DI	1	1938600000	SAI-AU M8 SB 8DIO	1	1938630000
8 digital inputs; 8 digital inputs / 8 digital outputs	SAI-AU M12 SB 8DI	1	1938610000	SAI-AU M12 SB 8DIO	1	1938640000
8 digital outputs 2A				SAI-AU M8 SB 8DO 2A	1	1938660000
8 digital outputs 2A				SAI-AU M12 SB 8DO 2A	1	1938680000
Note						

Accessories

Miscellaneous accessories	Type	Qty.	Order No.	Type	Qty.	Order No.
Marker, transparent	ESG 8/13.5/43.3 SAI AU	5	1912130000	ESG 8/13.5/43.3 SAI AU	5	1912130000
M12 protective cap	SAI-SK-M12-UNI 2029	20	2330260000	SAI-SK-M12-UNI 2029	20	2330260000
M8 protective cap	SAI-SK M8	50	1802760000	SAI-SK M8	50	1802760000
Note	Further cables can be found at the end of this chapter.			Further cables can be found at the end of this chapter.		

Subbus modules with analogue input/outputs

SAI-AU analogue

SAI-AU analogue

Technical data

Connections		
Connection to Subbus (SUB-IN)	1 x M8 plug 4-pole, A-coded	1 x M8 plug 4-pole, A-coded
Connection to Subbus (SUB-OUT)	1 x M8 female 4-pole, A-coded	1 x M8 female 4-pole, A-coded
I/O connections	4 x M12 female, 5-pole A-coded	4 x M12 female, 5-pole A-coded
Supply voltage		
Operating voltage	24 V (18 V DC ... 30 V DC)	24 V (18 V DC ... 30 V DC)
Analogue inputs		
Measurement range		-10 V ... +10 V, 0 V ... 10V, 0 ... 20 mA, 4...20 mA
Maximum input voltage in relation to GND		35 V
Input resistance (load)		<125 Ohm
Max. input current (differential)		-50 mA to +50 mA (protected against polarity reversal)
Short-circuit proof		Yes
Resolution / Precision		12-bit / < 0.2 %
Analogue outputs		
Measurement range	-10 V ... +10 V, 0 V ... 10V, 0 ... 20 mA, 4...20 mA	
Output interval	5 ms to 250 ms (can be configured)	
Short-circuit proof	Yes	
Resolution / Precision	12-bit / < 0.2 %	
Fieldbus		
Bus system	Subbus	Subbus
Addressing	automatic	automatic
System integration	automatic	automatic
General data		
L x W x H	155 mm / 30 mm / 32 mm	155 mm / 30 mm / 32 mm
Earth	< 200 g	< 200 g
Protection degree	IP67	IP67
Operating temperature	0...60 °C	0...60 °C
Storage temperature	-25 °C...85 °C	-25 °C...85 °C
Housing main material / UL 94 flammability rating	Pocan, PBT / 5VA	Pocan, PBT / 5VA
Certificate	CE, cULus	CE, cULus
Note		

Ordering data

Module variants	Type	Qty.	Order No.
4 analogue outputs / 4 analogue inputs	SAI-AU M12 SB 4AO	1	**1938700000**
Note			

Type	Qty.	Order No.
SAI-AU M12 SB 4AI	1	**1938690000**

Accessories

Miscellaneous accessories	Type	Qty.	Order No.
Marker, transparent	ESG 8/13.5/43.3 SAI AU	5	**1912130000**
M12 protective cap	SAI-SK-M12-UNI 2029	20	**2330260000**
M8 protective cap	SAI-SK M8	50	**1802760000**
Note	Further cables can be found at the end of this chapter.		

Type	Qty.	Order No.
ESG 8/13.5/43.3 SAI AU	5	**1912130000**
SAI-SK-M12-UNI 2029	20	**2330260000**
SAI-SK M8	50	**1802760000**
Further cables can be found at the end of this chapter.		

Subbus modules with functional inputs

SAI-AU Counter

Technical data

Connections	
Supply voltage (AUX-IN)	1x M12 plug 5-pole, A-coded
Connection to Subbus (SUB-IN)	1 x M8 plug 4-pole, A-coded
Connection to Subbus (SUB-OUT)	1 x M8 female 4-pole, A-coded
I/O connections	4 x M12 female, 5-pole A-coded
Supply voltage	
Operating voltage	24 V (18 V DC ... 30 V DC)
Contact load	Per PIN max. 4 A
Max. total current module	8 A
Functional inputs	
Counting breadth	32 Bit
Switching frequency	100 kHz
Number of inputs	2x release, 2x counter, 2 x count directions
Fieldbus	
Bus system	Subbus
Addressing	automatic
System integration	automatic
General data	
L x W x H	180 mm / 30 mm / 32 mm
Earth	< 200 g
Protection degree	IP67
Operating temperature	0...60 °C
Storage temperature	-25 °C...85 °C
Housing main material / UL 94 flammability rating	Pocan, PBT / 5VA
Certificate	CE, cULus
Note	

Ordering data

Module variants	Type	Qty.	Order No.
2 counter inputs / 2 gate outputs	SAI-AU M12 SB 2Counter	1	**1938730000**
Note			

Accessories

Miscellaneous accessories	Type	Qty.	Order No.
Marker, transparent	ESG 8/13.5/43.3 SAI AU	5	**1912130000**
M12 protective cap	SAI-SK-M12-UNI 2029	20	**2330260000**
M8 protective cap	SAI-SK M8	50	**1802760000**
Note	Further cables can be found at the end of this chapter.		

Subbus modules with functional inputs

SAI-AU Thermo

Technical data

Connections	
Connection to Subbus (SUB-IN)	1 x M8 plug 4-pole, A-coded
Connection to Subbus (SUB-OUT)	1 x M8 female 4-pole, A-coded
I/O connections	4 x M12 female, 5-pole A-coded
Supply voltage	
Operating voltage	24 V (18 V DC ... 30 V DC)
Functional inputs	
Sensor	Types J, K, L, B, E, N, R, S, T, U: mV readings
Temperature range	Typical for sensor, Preset Type K, -100 °C ... 1370 °C
Resolution	0.1 °C per digit
Conversion time	250 ms (can be configured to 70 ms)
Measurement error	< ± 0.5% (of measuring range limit)
Input filter	configurable
cold junction compensation	External PT1000 connection on pins 1 and 3 (GND)
Fieldbus	
Bus system	Subbus
Addressing	automatic
System integration	automatic
General data	
L x W x H	155 mm / 30 mm32 mm
Earth	< 200 g
Protection degree	IP67
Operating temperature	0...60 °C
Storage temperature	-25 °C...85 °C
Housing main material / UL 94 flammability rating	Pocan, PBT / 5VA
Certificate	CE, cULus
Note	

Ordering data

Module variants	Type	Qty.	Order No.
4 thermal inputs	SAI-AU M12 SB 4Thermo	1	1938720000
Note			

Accessories

Miscellaneous accessories	Type	Qty.	Order No.
Marker, transparent	ESG 8/13.5/43.3 SAI AU	5	1912130000
M12 protective cap	SAI-SK-M12-UNI 2029	20	2330260000
M8 protective cap	SAI-SK M8	50	1802760000
Note	Further cables can be found at the end of this chapter.		

Subbus modules with functional inputs

SAI-AU PT100

Technical data

Connections	
Connection to Subbus (SUB-IN)	1 x M8 plug 4-pole, A-coded
Connection to Subbus (SUB-OUT)	1 x M8 female 4-pole, A-coded
I/O connections	4 x M12 female, 5-pole A-coded
Supply voltage	
Operating voltage	24 V (18 V DC ... 30 V DC)
Functional inputs	
Sensor	N100, N1000, N120, PT100, PT1000, PT200, PT300, PT500, Potentiometer connection, Resistance measurement
Resolution	0.1 °C per digit
Conversion time	250 ms (can be configured to 65 ms)
Measurement error	< ± 1 °C
Input filter	configurable
Measurement range for PT sensors	-200 °C ... + 850 °C
Measurement range for Ni sensors	-60 °C ... +250 °C
Resistance measurement	max. 4000 Ohm
Potentiometer	100 to 4000 Ω (three-wire connection)
Measurement current	Typically 0.5 mA
Fieldbus	
Bus system	Subbus
Addressing	automatic
System integration	automatic
General data	
L x W x H	155 mm / 30 mm / 32 mm
Earth	< 200 g
Protection degree	IP67
Operating temperature	0...60 °C
Storage temperature	-25 °C...85 °C
Housing main material / UL 94 flammability rating	Pocan, PBT / 5VA
Certificate	CE, cULus
Note	

Ordering data

Module variants	Type	Qty.	Order No.
4 PT100 inputs	SAI-AU M12 SB 4PT100	1	**1938710000**
Note			

Accessories

Miscellaneous accessories	Type	Qty.	Order No.
Marker, transparent	ESG 8/13.5/43.3 SAI AU	5	**1912130000**
M12 protective cap	SAI-SK-M12-UNI 2029	20	**2330260000**
M8 protective cap	SAI-SK M8	50	**1802760000**
Note	Further cables can be found at the end of this chapter.		

Sensor Cables u-remote

Weidmüller is also offering the required sensor and actuator cables as a supplement to the new, innovative u-remote system. Generally, there are two different courses of action for cabling.

- Circular plug cables assembled on one end
- Cables assembled on both ends with u-remote plug-in connectors already connected

To make things easier to understand, only the M8 and M12 cables have been shown in this diagram. Actuator cables can also be found in catalogue 8.

The PUR cable used here is black, halogen-free and suitable for dragline cable carriers. The PVC cable is suitable for dragline cable carriers Further technical details are available in catalogue 8.
The minimum order quantity for each type of cable is 1 unit. This means that sample parts and the demand for replacement parts are also easy to manage.

Standard cable lengths

The cable lengths listed under order data are all 1.5 m. To order any other standard cable lengths, simply change the last four numbers in the order number.
Additional lengths can be supplied at the request of the customer.

Order data

Type	Length	Order No.
	1,5 m	xxxxxx0150
	3,0 m	xxxxxx0300
	5,0 m	xxxxxx0500
	10,0 m	xxxxxx1000

Description code example

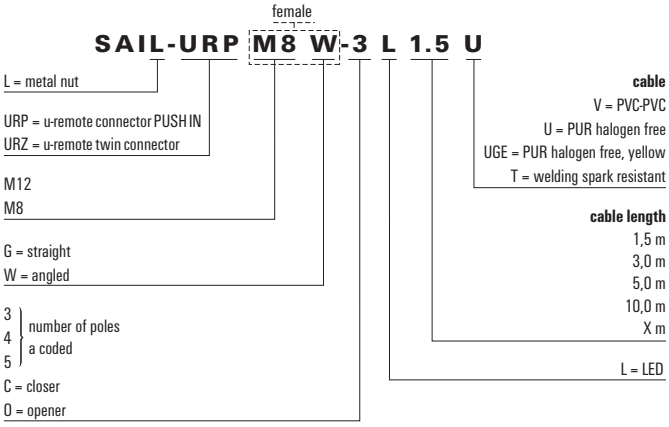

Connecting cables

u-remote plug / M12
u-remote plug / M8

PUR halogen-free

PVC

3-pin / NO contact

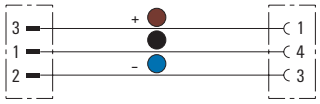

NC contact

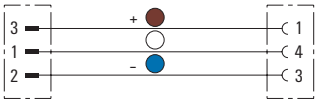

4-pin

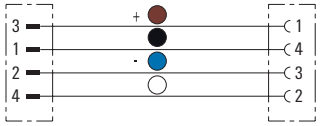

Twin / NO contact

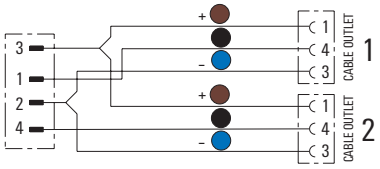

Technical data

Rated current	4 A	4 A
Rated voltage	250 V	250 V
Temperature range of housing	-40...+125 °C	-40...+125 °C
Core cross-section	0.34 mm²	0.34 mm²
Protection degree	IP67, IP68	IP67, IP68
Contact surface	Gold-plated	Gold-plated
Sheath material	PUR	PVC
Insulation	TPM	
Note		

Ordering data

Module variants	Type	Qty.	Order No.	Type	Qty.	Order No.
NOC/plug u-remote Socket, straight M12	SAIL-URPM12G-C-1.5U	1	**1475070150**	SAIL-URPM12G-C-1.5V	1	**1475280150**
NOC/plug u-remote Socket, angled M12	SAIL-URPM12W-C-1.5U	1	**1475080150**	SAIL-URPM12W-C-1.5V	1	**1475290150**
NCC/plug u-remote - Socket, straight M12	SAIL-URPM12G-O-1.5U	1	**1475090150**	SAIL-URPM12G-O-1.5V	1	**1475300150**
NCC/plug u-remote - Socket, angled M12	SAIL-URPM12W-O-1.5U	1	**1475120150**	SAIL-URPM12W-O-1.5V	1	**1475310150**
4 pole/plug u-remote - Socket, straight M12	SAIL-URPM12G-4-1.5U	1	**1475130150**	SAIL-URPM12G-4-1.5V	1	**1475320150**
4 pole/plug u-remote - Socket, angled M12	SAIL-URPM12W-4-1.5U	1	**1475140150**	SAIL-URPM12W-4-1.5V	1	**1475330150**
3 pole/plug u-remote - Socket, straight M8	SAIL-URPM8G-3-1.5U	1	**1475160150**	SAIL-URPM8G-C-1.5V	1	**1475340150**
3 pole/plug u-remote - Socket, angled M8	SAIL-URPM8W-3-1.5U	1	**1475170150**	SAIL-URPM8W-C-1.5V	1	**1475350150**
4 pole/plug u-remote - Socket, angled M12 - LED	SAIL-URPM12W-2L-1.5U	1	**1475450150**	SAIL-URPM12W-2L-1.5V	1	**1475500150**
3 pole/plug u-remote - Socket, angled M8 - LED	SAIL-URPM8W-2L-1.5U	1	**1475470150**	SAIL-URPM8W-2L-1.5V	1	**1475510150**
Double/NOC/plug u-remote - Socket, straight M12	SAIL-URZM12G-C-1.5U	1	**1475030150**			
Double/NOC/plug u-remote - Socket, angled M12	SAIL-URZM12W-C-1.5U	1	**1475040150**			
Double/3 pole/plug u-remote - Socket, straight M8	SAIL-URZM8G-3-1.5U	1	**1475050150**			
Double/3 pole/plug u-remote - Socket, angled M8	SAIL-URZM8W-3-1.5U	1	**1475060150**			
Note						

Accessories

Mounting tool	Type	Qty.	Order No.	Type	Qty.	Order No.
Tool set with torque function	SCREWTY SET -DM	1	**1920000000**	SCREWTY SET -DM	1	**1920000000**
Note						

M12 cables with connector at one end only

3-pole

Female

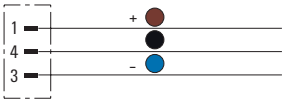

4-pole

Female

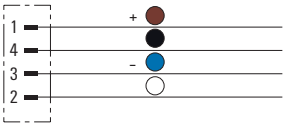

Technical data

Rated current	4 A	4 A
Rated voltage	250 V	250 V
Temperature range of housing	-40...+125 °C	-40...+125 °C
Core cross-section	0.34 mm²	0.34 mm²
Protection degree	IP65, IP66, IP67, IP68, when screwed in	IP65, IP66, IP67, IP68, when screwed in
Contact surface	Gold-plated	Gold-plated
Sheath material	PVC	PVC
Insulation	PVC	PVC
Note	Further technical data of the cables on catalog.weidmueller.com	Further technical data of the cables on catalog.weidmueller.com

Ordering data

Female, straight	**Type**	**Qty.**	**Order No.**	**Type**	**Qty.**	**Order No.**
M12 straight socket, PVC	SAIL-M12BG-3-1.5V	1	**1925570150**	SAIL-M12BG-4-1.5T	1	**1968580150**
M12 straight socket, halogen-free PUR	SAIL-M12BG-3-1.5U	1	**9457820150**	SAIL-M12BG-4-1.5U	1	**9457730150**
M12 straight socket, halogen-free PUR, yellow	SAIL-M12BG-3-1.5UGE	1	**1092910150**	SAIL-M12BG-4-1.5UGE	1	**1092920150**
M12 straight socket, halogen-free PUR, resistant to welding beads	SAIL-M12BG-3-1.5T	1	**1968590150**	SAIL-M12BG-4-1.5V	1	**1925580150**
Female, angled						
M12 angled socket, PVC	SAIL-M12BW-3-1.5V	1	**1925630150**	SAIL-M12BW-4-1.5V	1	**1925640150**
M12 angled socket, halogen-free PUR	SAIL-M12BW-3-1.5U	1	**9457320150**	SAIL-M12BW-4-1.5U	1	**9457740150**
M12 angled socket, halogen-free PUR, yellow	SAIL-M12BW-3-1.5UGE	1	**1092940150**	SAIL-M12BW-4-1.5UGE	1	**1092960150**
M12 angled socket, halogen-free PUR, resistant to welding beads	SAIL-M12BW-3-1.5T	1	**1968560150**	SAIL-M12BW-4-1.5T	1	**1968570150**
Note	Other versions on request			Other versions on request		

Accessories

Tools	**Type**	**Qty.**	**Order No.**	**Type**	**Qty.**	**Order No.**
Cutting tool	KT 8	1	**9002650000**	KT 8	1	**9002650000**
Sheathing strippers, For UTP and STP data cables	AM 12	1	**9030060000**	AM 12	1	**9030060000**
Mounting tool	Screwty-M12-DM	1	**1900001000**	Screwty-M12-DM	1	**1900001000**
	SAI-SCREWTY BOX	1	**1939180000**	SAI-SCREWTY BOX	1	**1939180000**
	STRIPPER 6-16 RED-LINE	1	**9203110000**	STRIPPER 6-16 RED-LINE	1	**9203110000**
Marking tags						
Transparent sleeves	TM-I 18 MC NE WS	320	**1718431044**	TM-I 18 MC NE WS	320	**1718431044**
Insertion label. yellow. 18 mm	TM-I 18 MC NE GE	320	**1718431687**	TM-I 18 MC NE GE	320	**1718431687**
Note						

M8 cables with connector at one end only

3-pole

Female

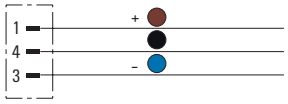

4-pole

Female

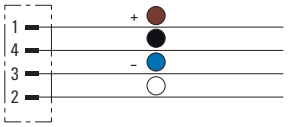

Technical data

Rated current	4 A	4 A
Rated voltage	60 V	30 V
Temperature range of housing	-40...+125 °C	-40...+125 °C
Core cross-section	0.25 mm²	0.25 mm²
Protection degree	IP65, IP66, IP67, IP68, when screwed in	IP65, IP66, IP67, IP68, when screwed in
Contact surface	Gold-plated	Gold-plated
Sheath material	PVC	PVC
Insulation	PVC	PVC
Note	Further technical data of the cables on catalog.weidmueller.com	Further technical data of the cables on catalog.weidmueller.com

Ordering data

Female, straight	**Type**	**Qty.**	**Order No.**	**Type**	**Qty.**	**Order No.**
M8 straight socket, PVC	SAIL-M8BG-3-1.5V	1	**1927240150**	SAIL-M8BG-4-1.5V	1	**1927260150**
M8 straight socket, halogen-free PUR	SAIL-M8BG-3-1.5U	1	**9457450150**	SAIL-M8BG-4-1.5U	1	**9457850150**
M8 straight socket, halogen-free PUR, yellow	SAIL-M8BG-3-1.5UGE	1	**1093190150**	SAIL-M8BG-4-1.5UGE	1	**1093200150**
Female, angled						
M8 angled socket, PVC	SAIL-M8BW-3-1.5V	1	**1927320150**	SAIL-M8BW-4-1.5V	1	**1927340150**
M8 angled socket, halogen-free PUR	SAIL-M8BW-3-1.5U	1	**9457380150**	SAIL-M8BW-4-1.5U	1	**9456150150**
M8 angled socket, halogen-free PUR, yellow	SAIL-M8BW-3-1.5UGE	1	**1093220150**	SAIL-M8BW-4-1.5UGE	1	**1093240150**
Note	Other versions on request			Other versions on request		

Accessories

Tools	**Type**	**Qty.**	**Order No.**	**Type**	**Qty.**	**Order No.**
Cutting tool	KT 8	1	**9002650000**	KT 8	1	**9002650000**
Sheathing strippers, For UTP and STP data cables	AM 12	1	**9030060000**	AM 12	1	**9030060000**
Mounting tool	Screwty-M12-DM	1	**1900001000**	Screwty-M12-DM	1	**1900001000**
	SAI-SCREWTY BOX	1	**1939180000**	SAI-SCREWTY BOX	1	**1939180000**
	STRIPPER 6-16 RED-LINE	1	**9203110000**	STRIPPER 6-16 RED-LINE	1	**9203110000**
Marking tags						
Transparent sleeves	TM-I 18 MC NE WS	320	**1718431044**	TM-I 18 MC NE WS	320	**1718431044**
Insertion label. yellow. 18 mm	TM-I 18 MC NE GE	320	**1718431687**	TM-I 18 MC NE GE	320	**1718431687**
Note						

M12 / M8 cables with connector at one end only with LED

3-pole / 2 LEDs

Female

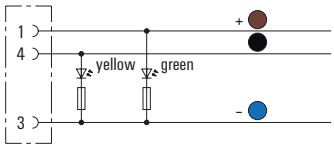

4-pole / 2 LEDs

Female

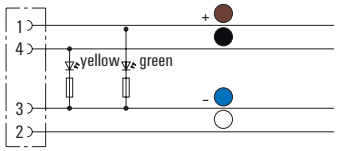

Technical data

Rated current	4 A	4 A
Rated voltage	24 V	24 V
Temperature range of housing	-40...+125 °C	-40...+125 °C
Core cross-section	0.34 mm²	0.34 mm²
Protection degree	IP65, IP66, IP67, IP68, when screwed in	IP65, IP66, IP67, IP68, when screwed in
Contact surface	Gold-plated	Gold-plated
Sheath material	PVC	PVC
Insulation	PVC	PVC
Note	Further technical data of the cables on catalog.weidmueller.com	Further technical data of the cables on catalog.weidmueller.com

Ordering data

Female, angled	**Type**	**Qty.**	**Order No.**
M12 angled socket, PVC	SAIL-M12BW-3L1.5V	1	**1925460150**
M12 angled socket, halogen-free PUR	SAIL-M12BW-3L1.5U	1	**9457800150**
M12 angled socket, halogen-free PUR, yellow	SAIL-M12BW-3L1.5UGE	1	**1114880150**
M12 angled socket, halogen-free PUR, resistant to welding beads	SAIL-M12BW-3L1.5T	1	**1004330150**
M8 angled socket, PVC	SAIL-M8BW-3L1.5V	1	**1927350150**
M8 angled socket, halogen-free PUR	SAIL-M8BW-3L1.5U	1	**9457460150**
M8 angled socket, halogen-free PUR, yellow	SAIL-M8BW-3L1.5UGE	1	**1093210150**
Note	Other versions on request		

Female, angled	**Type**	**Qty.**	**Order No.**
M12 angled socket, PVC	SAIL-M12BW-4-2L1.5V	1	**1925470150**
M12 angled socket, halogen-free PUR	SAIL-M12BW-4-2L1.5U	1	**9456380150**
M12 angled socket, halogen-free PUR, yellow	SAIL-M12BW-4-2L1.5UGE	1	**1092950150**
M12 angled socket, halogen-free PUR, resistant to welding beads	SAIL-M12BW-4-2L1.5T	1	**1007000150**
M8 angled socket, PVC	SAIL-M8BW-4L1.5V	1	**1927360150**
M8 angled socket, halogen-free PUR	SAIL-M8BW-4L1.5U	1	**1906400150**
M8 angled socket, halogen-free PUR, yellow	SAIL-M8BW-4L1.5UGE	1	**1093230150**
Note	Other versions on request		

Accessories

Tools	**Type**	**Qty.**	**Order No.**
Cutting tool	KT 8	1	**9002650000**
Sheathing strippers, For UTP and STP data cables	AM 12	1	**9030060000**
Mounting tool	Screwty-M12-DM	1	**1900001000**
	SAI-SCREWTY BOX	1	**1939180000**
	STRIPPER 6-16 RED-LINE	1	**9203110000**
Marking tags			
Transparent sleeves	TM-I 18 MC NE WS	320	**1718431044**
Insertion label. yellow. 18 mm	TM-I 18 MC NE GE	320	**1718431687**
Note			

Tools	**Type**	**Qty.**	**Order No.**
Cutting tool	KT 8	1	**9002650000**
Sheathing strippers, For UTP and STP data cables	AM 12	1	**9030060000**
Mounting tool	Screwty-M12-DM	1	**1900001000**
	SAI-SCREWTY BOX	1	**1939180000**
	STRIPPER 6-16 RED-LINE	1	**9203110000**
Marking tags			
Transparent sleeves	TM-I 18 MC NE WS	320	**1718431044**
Insertion label. yellow. 18 mm	TM-I 18 MC NE GE	320	**1718431687**
Note			

M12 straight/angled socket

Dimensioned drawing

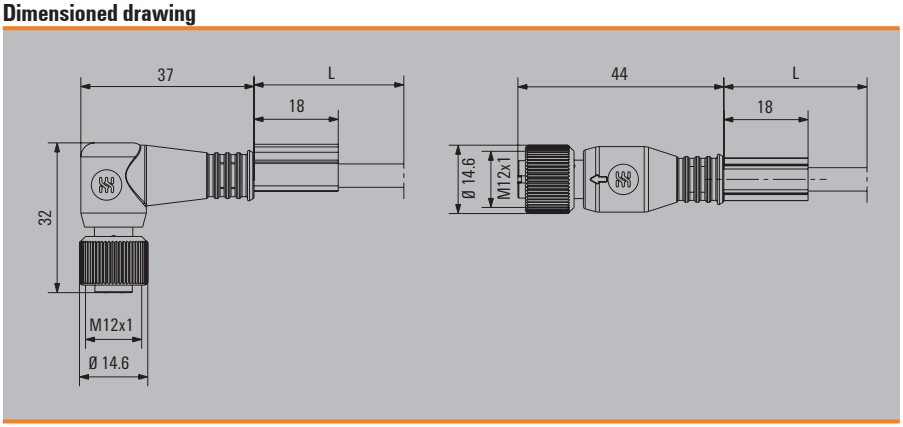

M8 straight/angled socket

Dimensioned drawing

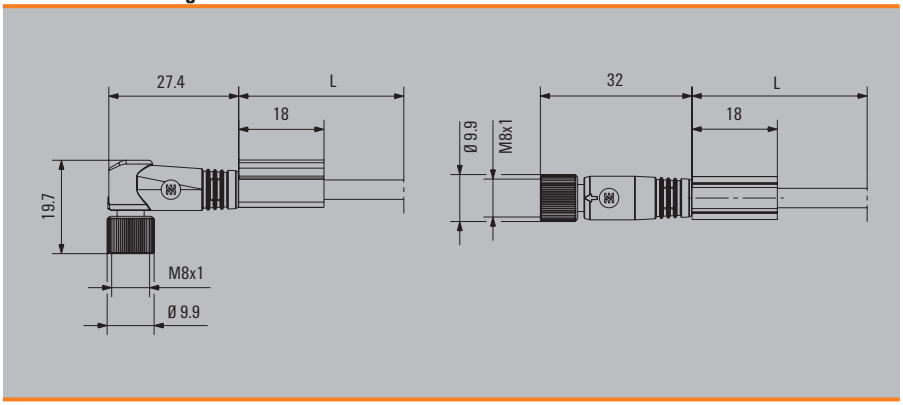

Screwty® set -DM

Contents:

- 1x interchangeable bit
- 1x torque handle
- 1x adjustment aid for Screwty® torque (M8: 0.5 - 0.6 Nm / M12: 0.8 - 1.2 Nm)
- 1x Screwty® M12, M8, M12 F, M8 F attachment

Ordering data

Type	Qty.	Order No.
Screwty®-Set-DM	1	1920000000

Quick selection IP67 Remote I/O modules

Selection table

Order No.	Product designation	Connection system				Communication							
		M8	M12	7/8"	PushPull	CANopen	DeviceNet™	Modbus ASCII (RS-232/USB)	Subbus	PROFIBUS	PROFINET	MP = PN, EIP & EC	
	u-remote UR67												
2426250000	UR67-PN-HP-8IOL-12-30M		X								X		
2426260000	UR67-PN-HP-8IOL-12-60M		X								X		
2426270000	UR67-MP-HP-16DI-12-60M		X									X	
2426280000	UR67-MP-HP-16DO-12-60M		X									X	
2512840000	UR67-MP-HP-16DIO-12-60M		X									X	
2426290000	UR67-MP-HP-8DIDO-12-60M		X									X	
2426320000	UR67-MP-78-8DIDO-12-60M			X								X	
2426300000	UR67-MP-78-16DI-12-60M			X								X	
2426310000	UR67-MP-78-16DO-12-60M			X								X	
2512830000	UR67-MP-78-16DIO-12-60M			X								X	
2599670000	UR67-PN-V14-CU-8DIDO-12				X						X		
2599680000	UR67-PN-V14-CU-16DI-12				X						X		
2599690000	UR67-PN-V14-POF-8DIDO-12				X						X		
2599700000	UR67-PN-V14-POF-16DI-12				X						X		
2426360000	UR67-PB-12-8DI-8-30K		X							X			
2426330000	UR67-PB-12-8DIO-8-30K		X							X			
2426370000	UR67-PB-78-16DI-12-60K			X						X			
2426340000	UR67-PB-78-16DIO-12-60K			X						X			
2426390000	UR67-PB-78-16DI-12-60M			X						X			
2426400000	UR67-PB-78-16DO-12-60M			X						X			
2426380000	UR67-PB-78-8DIDO-12-60M			X						X			
	SAI Active Universal												
1906680000	SAI-AU M8 CAN 16DI	X				X							
1906690000	SAI-AU M8 CAN 16DI/8DO	X				X							
1906650000	SAI-AU M12 CAN 16DI		X			X							
1906660000	SAI AU M12 CAN 16DI/8DO		X			X							
1906670000	SAI-AU M12 CAN AI/AO/DI		X			X							
1906730000	SAI-AU M8 DN 16DI	X					X						
1906740000	SAI AU M8 DN 16DI/8DO	X					X						
1906700000	SAI-AU M12 DN 16DI		X				X						
1906710000	SAI AU M12 DN 16DI/8DO		X				X						
1906720000	SAI-AU M12 DN AI/AO/DI		X				X						
	SAI Active Universal Pro												
1938570000	SAI-AU M12 DN GW 16DI		X				X		X				
1938600000	SAI-AU M8 SB 8DI	X							X				
1938660000	SAI-AU M8 SB 8DO 2A	X							X				
1938630000	SAI-AU M8 SB 8DIO	X							X				
1938610000	SAI-AU M12 SB 8DI		X						X				
1938680000	SAI-AU M12 SB 8DO 2A		X						X				
1938640000	SAI-AU M12 SB 8DIO		X						X				
1938690000	SAI-AU M12 SB 4AI		X						X				
1938700000	SAI-AU M12 SB 4AO		X						X				
1938730000	SAI-AU M12 SB 2Counter		X						X				
1938720000	SAI-AU M12 SB 4Thermo		X						X				
1938710000	SAI-AU M12 SB 4PT100		X						X				

Inputs						Outputs					Special characteristics	Page
IO-Link	Digital	Analogue	Counter	TC	RTD	Digital	Output current	Analogue	Output range	Supply voltage feed circuits		
4xType A & 4xType B											- Max. total current module = 16 A	C.4
4xType A & 4xType B											- Max. total current module = 16 A	C.4
	16										- Max. total current module = 9 A	C.5
						16	2 A					C.5
	16					16	2 A				- Max. total current module = 9 A	C.6
	8					8	2 A				- Max. total current module = 9 A	C.6
	8					8	2 A				- Max. total current module = 9 A	C.8
	16											C.8
						16	2 A				- Max. total current module = 9 A	C.7
	16					16	2 A				- Max. total current module = 9 A	C.7
	8					8	2 A					C.9
	16											C.9
	8					8	2 A					C.10
	16											C.10
	8											C.13
	8					8	0.5 A				- Max. total current module = 4 A	C.13
	16											C.14
	16					16	1.6 A				- Max. total current module = 9 A	C.14
	16											C.15
						16	1.6 A				- Max. total current module = 9 A	C.15
	8					8	1.6 A				- Max. total current module = 9 A	C.16
	16									2		C.19
	max. 16, min. 8 (can be configured)					max. 8, min. 0 (can be configured)	0.5 A			4	- Max. I/O channels = 16	C.19
	16									2		C.19
	max. 16, min. 8 (can be configured)					max. 8, min. 0 (can be configured)	0.5 A			4	- Max. I/O channels = 16	C.19
	4	4						2	-10...+10 V, 0...+10 V, 0...20 mA, 4...20 mA	2		C.20
	16									2		C.21
	max. 16, min. 8 (can be configured)					max. 8, min. 0 (can be configured)	0.5 A			4	- Max. I/O channels = 16	C.21
	16									2		C.21
	max. 16, min. 8 (can be configured)					max. 8, min. 0 (can be configured)	0.5 A			4	- Max. I/O channels = 16	C.21
	4	4						2	-10...+10 V, 0...+10 V, 0...20 mA, 4...20 mA	2		C.22
	16									2		C.25
	8											C.26
						8	2 A			2	- Max. total current, output = 8 A	C.26
	max. 8, min. 0 (can be configured)					max. 8, min. 0 (can be configured)	0.5 A			2	- Max. I/O channels = 8 - Max. total current, output = 4 A	C.26
	8											C.26
						8	2 A			2	- Max. I/O channels = 8 - Max. total current, output = 4 A	C.26
	max. 8, min. 0 (can be configured)					max. 8, min. 0 (can be configured)	0.5 A			2	- Max. I/O channels = 8	C.26
		4										C.27
								4	-10...+10 V, 0...+10 V, 0...20 mA, 4...20 mA			C.27
			2							2		C.28
				4								C.29
					4							C.30

Touch Panels
u-view

Touch Panels
u-view

Overview	D.2
Basic Line	D.4
Advanced Line	D.6

Optimal display and operation

u-view Multitouch-Panels: Brilliant pictures meet elegant, flat design

Comfortable multi-touch panels simplify the monitoring and control of machines and systems. u-view multi-touch panels from Weidmüller offer excellent image quality and can be used in an industrial environment without any restrictions.

The u-view series includes two product lines:
- Basic (resistive touch panels) in 4.3“, 7“ and 10.1“ sizes
- Advanced (capacitive multitouch panels) in 7“, 10.1“ and 15.6“

All panels offer convenient configuration options for accessing different web servers using modern browsers. This makes them ideal for future-oriented web applications, in particular for web-based visualisation solutions with u-create PROCON-WEB.

u-view touch panels are characterised by their extremely flat design. Furthermore, they have a robust aluminium housing and are IP66 protected on the front.

Comfortable configuration
u-view touch panels are quick and easy to configure and can therefore be set up intuitively.

Attractive design
All u-view multi-touch panels come with particularly flat and space-saving aluminium housings.

High compatibility
u-view multi-touch panels can be used in a wide variety of applications thanks to their modern web technology based on HTML5.

Great performance
First-class image quality and powerful processors make working with u-view multi-touch panels particularly enjoyable.

Touch Panel

- Resistive
- 4.3 ", 7 " and 10.1 "
- 4 GB memory
- Display material plastic

UV66-BAS-4-RES-W

UV66-BAS-7-RES-W

Technical data

General data	UV66-BAS-4-RES-W	UV66-BAS-7-RES-W
Protection degree	IP66	IP66
Voltage supply	24 V DC	24 V DC
Angle (horizontal)	Left: 130° / Right: 130°	Left: 70° / Right: 70°
Angle (vertical)	Above: 90° / Below: 90°	Above: 70° / Below: 60°
Operating temperature	0 °C ... +50 °C	0 °C ... +50 °C
Depth / Width / Height	30 / 140 / 95 mm	40 / 204 / 147.6 mm
System data		
Operating system	Linux + Browser (HTML5)	Linux + Browser (HTML5)
Processor	ARM Cortex A8 1 GHz Freescale® i.MX535	ARM Cortex A9 1 GHz NXP® i.MX6 DualLite
RAM	1 GB	1 GB
Memory (Flash)	4 GB	4 GB
Interface	1x Ethernet 10/100/1000 MBit/s (RJ45), 1x USB 2.0, 1 x serial RS-232/RS-485/RS-422	2 x Ethernet 10/100/1000 MBit/s (RJ45), 2 x USB 2.0 (host), 1 x serial RS-232/RS-485/RS-422
Features		
Number of displayable colours	16 M	16 M
Resolution	480 x 272	800 x 480
Size	4.3 "	7 "
Luminance	400 cd/m²	500 cd/m²
Material display	Plastic	Plastic
Material frame	metal	metal
Touch-Screen	resistive	resistive
Note		

Ordering data

Module variants	Type	Qty.	Order No.
Touch Panel	UV66-BAS-4-RES-W	1	**2555800000**
Note			

Type	Qty.	Order No.
UV66-BAS-7-RES-W	1	**2555810000**

Touch Panel

- Resistive
- 4.3 ", 7 " and 10.1 "
- 4 GB memory
- Display material plastic

UV66-BAS-10-RES-W

Technical data

General data	
Protection degree	IP66
Voltage supply	24 V DC
Angle (horizontal)	Left: 85° / Right: 85°
Angle (vertical)	Above: 85° / Below: 85°
Operating temperature	0 °C ... +50 °C
Depth / Width / Height	49 / 293 / 201.5 mm
System data	
Operating system	Linux + Browser (HTML5)
Processor	ARM Cortex A9 1 GHz NXP® i.MX6 DualLite
RAM	1 GB
Memory (Flash)	4 GB
Interface	2 x Ethernet 10/100/1000 MBit/s (RJ45), 2 x USB 2.0 (host), 1 x serial RS-232/RS-485/RS-422
Features	
Number of displayable colours	16 M
Resolution	1280 x 800
Size	10.1 "
Luminance	400 cd/m²
Material display	Plastic
Material frame	metal
Touch-Screen	resistive
Note	

Ordering data

Module variants			
	Touch Panel		
Note			

Type	Qty.	Order No.
UV66-BAS-10-RES-W	1	**2555820000**

MultiTouch Panel

- Capacitive
- 7 ", 10.1 " und 15.6 "
- 4 GB memory
- Display material glass

UV66-ADV-7-CAP-W

UV66-ADV-10-CAP-W

Technical data

General data		
Protection degree	IP66	IP66
Voltage supply	24 V DC	24 V DC
Angle (horizontal)	Left: 70° / Right: 70°	Left: 85° / Right: 85°
Angle (vertical)	Above: 70° / Below: 60°	Above: 85° / Below: 85°
Operating temperature	0 °C ... +50 °C	0 °C ... +50 °C
Depth / Width / Height	40 / 204 / 147.6 mm	48 / 293 / 201.5 mm
System data		
Operating system	Linux + Browser (HTML5)	Linux + Browser (HTML5)
Processor	ARM Cortex A9 1 GHz NXP® i.MX6 DualLite	ARM Cortex A9 1 GHz NXP® i.MX6 DualLite
RAM	1 GB	1 GB
Memory (Flash)	4 GB	4 GB
Interface	2 x Ethernet 10/100/1000 MBit/s (RJ45), 2 x USB 2.0 (host), 1 x serial RS-232/RS-485/RS-422	2 x Ethernet 10/100/1000 MBit/s (RJ45), 2 x USB 2.0 (host), 1 x serial RS-232/RS-485/RS-422
Features		
Number of displayable colours	16 M	16 M
Resolution	800 x 480	1280 x 800
Size	7 "	10.1 "
Luminance	500 cd/m²	400 cd/m²
Material display	Glass	Glass
Material frame	metal	metal
Touch-Screen	MultiTouch, capacitive	MultiTouch, capacitive
Note		

Ordering data

Module variants			
	MultiTouch Panel		
Note			

Type	Qty.	Order No.
UV66-ADV-7-CAP-W	1	**2555830000**

Type	Qty.	Order No.
UV66-ADV-10-CAP-W	1	**2555840000**

MultiTouch Panel

- Capacitive
- 7 ", 10.1 " und 15.6 "
- 4 GB memory
- Display material glass

UV66-ADV-15-CAP-W

Technical data

General data	
Protection degree	IP66
Voltage supply	24 V DC
Angle (horizontal)	Left: 85° / Right: 85°
Angle (vertical)	Above: 80° / Below: 80°
Operating temperature	0 °C ... +50 °C
Depth / Width / Height	49 / 433 / 267 mm
System data	
Operating system	Linux + Browser (HTML5)
Processor	ARM Cortex A9 1 GHz NXP® i.MX6 DualLite
RAM	1 GB
Memory (Flash)	4 GB
Interface	2 x Ethernet 10/100/1000 MBit/s (RJ45), 2 x USB 2.0 (host), 1 x serial RS-232/RS-485/RS-422
Features	
Number of displayable colours	16 M
Resolution	1366 x 768
Size	15.6 "
Luminance	400 cd/m²
Material display	Glass
Material frame	metal
Touch-Screen	MultiTouch, capacitive
Note	

Ordering data

Module variants	
	MultiTouch Panel
Note	

Type	Qty.	Order No.
UV66-ADV-15-CAP-W	1	**2555850000**

Industrial PC's, Panel PC's and Monitors
u-view

Industrial PC's, Panel PC's and Monitors
u-view

Overview	E.2
Industrial PC's	E.4
Industrial Panel PC's	E.10
Industrial Monitors	E.13

Flexible implementation of visualization, control and IoT applications
Reliable industrial PCs for your automation

High-performance IPCs and Panel PCs enable the flexible control, operation and monitoring of machines and systems. u-view IPCs and Panel PCs from Weidmüller are known for their high reliability and are designed for state-of-the-art visualisation, control and IoT applications.

The u-view IPC and Panel PC series use the latest, passively cooled Intel® Atom™, Celeron™, and Core™ i-processors. By selecting from high-quality aluminium housings in various sizes, a wide range of interfaces, and modern operating systems, you can build IPCs that optimally fit your requirements. The Panel PCs close the gap between IPCs and HMIs by combining the high-quality display technology of u-view HMIs with the performance of state-of-the-art hardware.

Long-term available components and highest demands on processing and design make the u-view portfolio the optimal hardware for your future-oriented visualization, control and IoT applications.

Flexible application range
u-view IPCs and Panel PCs are perfectly tailored for state-of-the-art visualization, automation and IoT applications and support Windows and Linux operating systems.

Scaleable performance
The different performance classes provide a broad selection of hardware for an optimal fit to your applications.

High-quality finish for industrial use
The sturdy aluminium housings meet the highest quality requirements and enable the passive cooling of IPCs and Panel PCs through intelligent heat management.

Ultra Compact PC - 1000

	UV20-B-IPC-1011.01	UV20-B-IPC-1000.01

Technical data

General data		
Width / Height / Depth	43.4 / 140 / 101.5 mm	43.4 / 140 / 101.5 mm
Weight	350 g	350 g
Protection degree	IP20	IP20
Voltage supply	24 V DC (18-32 V DC) isolated	24 V DC (18-32 V DC) isolated
Humidity	80% relative humidity (without condensation)	80% relative humidity (without condensation)
Operating temperature	0 °C ... +50 °C	0 °C ... +55 °C
Storage temperature	-10 °C ... +60 °C	-10 °C ... +60 °C
Approvals	CE, EN 61000-3-2,-3, EN 55022, EN 55024, EN 60950-1, cULus LISTED (UL 61010)	CE, EN 61000-3-2,-3, EN 55022, EN 55024, EN 60950-1, cULus LISTED (UL 61010)
System data		
Processor	Intel Atom® x7-E3950 - Quad Core 1.6 GHz (2.0 GHz Burst)	Intel Atom® x5-E3930 - Dual Core 1.3 GHz (1.8 GHz Burst)
RAM	4 GB, DDR4, soldered	2 GB, DDR4, soldered
Operating system	Windows 10 IoT Enterprise LTSC 2019 64bit - Entry	no pre-installed operating System
Interfaces in front	2 x Ethernet 10/100/1000 MBit/s (RJ45), 2x USB 3.0, 1x Displayport™	2 x Ethernet 10/100/1000 MBit/s (RJ45), 2x USB 3.0, 1x Displayport™
Memory	64 GB m.2 SSD	64 GB m.2 SSD
Note		

Ordering data

	Type	Qty.	Order No.	Type	Qty.	Order No.
Ultra Compact PC - 1000	UV20-B-IPC-1011.01	1	**2665800000**	UV20-B-IPC-1000.01	1	**2676340000**
Note						

UV20-B-IPC-1011.02

43.4 / 140 / 101.5 mm
350 g
IP20
24 V DC (18-32 V DC) isolated
80% relative humidity (without condensation)
0 °C ... +50 °C
-10 °C ... +60 °C
CE, EN 61000-3-2,-3, EN 55022, EN 55024, EN 60950-1, cULus LISTED (UL 61010)
Intel Atom® x7-E3950 - Quad Core 1.6 GHz (2.0 GHz Burst)
4 GB, DDR4, soldered
Windows 10 IoT Enterprise LTSC 2019 64bit - Entry
2 x Ethernet 10/100/1000 MBit/s (RJ45), 2x USB 3.0, 1x Displayport™
128 GB m.2 SSD

Type	Qty.	Order No.
UV20-B-IPC-1011.02	1	**2676350000**

Compact PC - 2000

UV20-B-IPC-2001.02

UV20-B-IPC-2001.01

Technical data

General data		
Width / Height / Depth	54.3 / 185 / 182 mm	48 / 185 / 182 mm
Weight	1000 g	1050 g
Protection degree	IP20	IP20
Voltage supply	24 V DC (18-32 V DC) isolated	24 V DC (18-32 V DC) isolated
Humidity	80% relative humidity (without condensation)	80% relative humidity (without condensation)
Operating temperature	0 °C ... +50 °C	0 °C ... +50 °C
Storage temperature	-10 °C ... +60 °C	-10 °C ... +60 °C
Approvals	CE, EN 61000-3-2,-3, EN 55022, EN 55024, EN 60950-1, cULus LISTED (UL 61010)	CE, EN 61000-3-2,-3, EN 55022, EN 55024, EN 60950-1, cULus LISTED (UL 61010)
System data		
Processor	Intel® Celeron® J1900 - Quad Core 2.0 GHz (2.42 GHz Burst)	Intel® Celeron® J1900 - Quad Core 2.0 GHz (2.42 GHz Burst)
RAM	4 GB, DDR3	4 GB, DDR3
Memory	60 GB mSATA SSD	60 GB mSATA SSD
Operating system	no pre-installed operating System	Windows 10 IoT Enterprise LTSC 2019 64bit - Entry
Interfaces above	2 x Ethernet 10/100/1000 MBit/s (RJ45), 1x USB 2.0, 1x USB 3.0, 1x DVI-D	2 x Ethernet 10/100/1000 MBit/s (RJ45), 2x USB 2.0, 1x USB 3.0, 1x DVI-D, 1x RS232 (DB9M)
Interfaces in front	1x Cfast slot	1x Cfast slot
Note		

Ordering data

	Type	Qty.	Order No.
Compact PC - 2000	UV20-B-IPC-2001.02	1	**2665810000**
Note			

Type	Qty.	Order No.
UV20-B-IPC-2001.01	1	**2676370000**

UV20-B-IPC-2001.03

48 / 185 / 182 mm
1000 g
IP20
24 V DC (18-32 V DC) isolated
80% relative humidity (without condensation)
0 °C ... +50 °C
-10 °C ... +60 °C
CE, EN 61000-3-2,-3, EN 55022, EN 55024, EN 60950-1, cULus LISTED (UL 61010)
Intel® Celeron® J1900 - Quad Core 2.0 GHz (2.42 GHz Burst)
4 GB, DDR3
120 GB mSATA SSD
Windows 10 IoT Enterprise LTSC 2019 64bit - Entry
2 x Ethernet 10/100/1000 MBit/s (RJ45), 1x USB 2.0, 1x USB 3.0, 1x DVI-D
1x Cfast slot

Type	Qty.	Order No.
UV20-B-IPC-2001.03	1	**2676380000**

Box PC - 3000

	UV20-B-IPC-3000.01	UV20-B-IPC-3010.01

Technical data

General data		
Width / Height / Depth	71 / 220 / 159.5 mm	71 / 220 / 159.5 mm
Weight	1800 g	1800 g
Protection degree	IP20	IP20
Voltage supply	24 V DC (18-32 V DC) isolated	24 V DC (18-32 V DC) isolated
Humidity	80% relative humidity (without condensation)	80% relative humidity (without condensation)
Operating temperature	0 °C ... +50 °C	0 °C ... +50 °C
Storage temperature	-10 °C ... +60 °C	-10 °C ... +60 °C
Approvals	CE, EN 61000-3-2,-3, EN 55022, EN 55024, EN 60950-1, cULus LISTED (UL 61010)	CE, EN 61000-3-2,-3, EN 55022, EN 55024, EN 60950-1, cULus LISTED (UL 61010)
System data		
Processor	Intel® Celeron® 3955U - Dual Core 2.0 GHz	Intel® Core™ i3-6100U - Dual Core 2.3 GHz
RAM	4 GB, DDR4	4 GB, DDR4
Memory	60 GB mSATA SSD	60 GB mSATA SSD
Operating system	Windows 10 IoT Enterprise LTSC 2019 64bit - Value	Windows 10 IoT Enterprise LTSC 2019 64bit - Value
Interfaces above	3x Ethernet 10/100/1000 MBit/s (RJ45), 2x USB 3.0, 1x DVI-D	3x Ethernet 10/100/1000 MBit/s (RJ45), 2x USB 3.0, 1x DVI-D
Interfaces in front	1x Cfast slot, 1x USB 3.0	1x Cfast slot, 1x USB 3.0
Safety features	TPM (Trusted Platform Module)	TPM (Trusted Platform Module)
Note		

Ordering data

	Type	Qty.	Order No.
Box PC - 3000	UV20-B-IPC-3000.01	1	**2676390000**
Note			

Type	Qty.	Order No.
UV20-B-IPC-3010.01	1	**2676400000**

UV20-B-IPC-3021.01

71 / 220 / 159.5 mm
1800 g
IP20
24 V DC (18-32 V DC) isolated
80% relative humidity (without condensation)
0 °C ... +50 °C
-10 °C ... +60 °C
CE, EN 61000-3-2,-3, EN 55022, EN 55024, EN 60950-1, cULus LISTED (UL 61010)
Intel® Core™ i5-6300U - Dual Core 2.4 GHz (3.0 GHz Turbo)
8 GB, DDR4
120 GB mSATA SSD
Windows 10 IoT Enterprise LTSC 2019 64bit - Value
3x Ethernet 10/100/1000 MBit/s (RJ45), 2x USB 3.0, 1x DVI-D
1x Cfast slot, 1x USB 3.0
TPM (Trusted Platform Module)

Type	Qty.	Order No.
UV20-B-IPC-3021.01	1	**2676410000**

UV20-B-IPC-3031.01

71 / 220 / 159.5 mm
1800 g
IP20
24 V DC (18-32 V DC) isolated
80% relative humidity (without condensation)
0 °C ... +50 °C
-10 °C ... +60 °C
CE, EN 61000-3-2,-3, EN 55022, EN 55024, EN 60950-1, cULus LISTED (UL 61010)
Intel® Core™ i7-6600U - Dual Core 2.6 GHz (3.4 GHz Turbo)
8 GB, DDR4
120 GB mSATA SSD
Windows 10 IoT Enterprise LTSC 2019 64bit - High End
3x Ethernet 10/100/1000 MBit/s (RJ45), 2x USB 3.0, 1x DVI-D
1x Cfast slot, 1x USB 3.0
TPM (Trusted Platform Module)

Type	Qty.	Order No.
UV20-B-IPC-3031.01	1	**2665820000**

UV20-B-IPC-3032.01

71 / 220 / 159.5 mm
1800 g
IP20
24 V DC (18-32 V DC) isolated
80% relative humidity (without condensation)
0 °C ... +50 °C
-10 °C ... +60 °C
CE, EN 61000-3-2,-3, EN 55022, EN 55024, EN 60950-1, cULus LISTED (UL 61010)
Intel® Core™ i7-6600U - Dual Core 2.6 GHz (3.4 GHz Turbo)
16 GB, DDR4
120 GB mSATA SSD
no pre-installed operating System
3x Ethernet 10/100/1000 MBit/s (RJ45), 2x USB 3.0, 1x DVI-D
1x Cfast slot, 1x USB 3.0
TPM (Trusted Platform Module)

Type	Qty.	Order No.
UV20-B-IPC-3032.01	1	**2676420000**

Panel PC - 1000 Basic

UV66-BAS-XX-IPPC-1001.01

Technical data

General data	
Width / Height / Depth	215 / 167 / 79 mm
Weight	7 ": 1800 g / 10.1 ": 2200 g / 12.1 ": 2600 g / 15.6 ": 3700 g
Protection degree	IP66
Voltage supply	24 V DC (18-32 V DC) isolated
Humidity	80% relative humidity (without condensation)
Operating temperature	0 °C ... +50 °C
Storage temperature	-20 °C ... +60 °C
Approvals	CE, EN 61000-3-2,-3, EN 55022, EN 55024, EN 60950-1, cULus LISTED (UL 61010)
System data	
Processor	Intel® Celeron® J1900 - Quad Core 2.0 GHz (2.42 GHz Burst)
RAM	4 GB, DDR3
Memory	60 GB mSATA SSD
Operating system	Windows 10 IoT Enterprise LTSC 2019 64bit - Entry
Interfaces in front	1x USB 2.0
Interfaces behind	2 x Ethernet 10/100/1000 MBit/s (RJ45), 1x USB 3.0, 1x USB 2.0, 1x Cfast slot
Equipment	
Number of displayable colours	16 M
Luminance	400 cd/m²
Material display	Plastic
Material frame	Aluminium
Touch-Screen	resistive
Note	

Ordering data

	Type	Qty.	Order No.
Display size: 7", Resolution: 800 x 480	UV66-BAS-7-IPPC-1001.01	1	**2676430000**
Display size: 10.1", Resolution: 1280 x 800	UV66-BAS-10-IPPC-1001.01	1	**2676450000**
Display size: 12.1", Resolution: 1280 x 800	UV66-BAS-12-IPPC-1001.01	1	**2676470000**
Display size: 15.6", Resolution: 1366 x 768	UV66-BAS-15-IPPC-1001.01	1	**2676490000**
Note			

Panel PC - 1000 Advanced

UV66-ADV-XX-IPPC-1001.01

Technical data

General data	
Width / Height / Depth	204 / 148 / 77.6 mm
Weight	7 ": 1800 g / 10.1 ": 2200 g / 12.1 ": 2600 g / 15.6 ": 3700 g
Protection degree	IP66
Voltage supply	24 V DC (18-32 V DC) isolated
Humidity	80% relative humidity (without condensation)
Operating temperature	0 °C ... +50 °C
Storage temperature	-20 °C ... +60 °C
Approvals	CE, EN 61000-3-2,-3, EN 55022, EN 55024, EN 60950-1, cULus LISTED (UL 61010)
System data	
Processor	Intel® Celeron® J1900 - Quad Core 2.0 GHz (2.42 GHz Burst)
RAM	4 GB, DDR3
Memory	60 GB mSATA SSD
Operating system	Windows 10 IoT Enterprise LTSC 2019 64bit - Entry
Interfaces in front	1x USB 2.0
Interfaces behind	2 x Ethernet 10/100/1000 MBit/s (RJ45), 1x USB 3.0, 3x USB 2.0, 1x Cfast slot
Equipment	
Number of displayable colours	16 M
Luminance	400 cd/m²
Material display	Glass
Material frame	Aluminium
Touch-Screen	capacitive, MultiTouch
Note	

Ordering data

	Type	Qty.	Order No.
Display size: 7", Resolution: 800 x 480, add. 2x USB 2.0 ports	UV66-ADV-7-IPPC-1001.01	1	**2665830000**
Display size: 10.1", Resolution: 1280 x 800	UV66-ADV-10-IPPC-1001.01	1	**2676460000**
Display size: 12.1", Resolution: 1280 x 800	UV66-ADV-12-IPPC-1001.01	1	**2676480000**
Display size: 15.6", Resolution: 1366 x 768	UV66-ADV-15-IPPC-1001.01	1	**2676500000**
Note			

Panel PC - 3000 Advanced

	UV66-ADV-XX-IPPC-3001.01	UV66-ADV-XX-IPPC-3022.01

Technical data

General data		
Width / Height / Depth	331 / 234 / 83 mm	581.5 / 367.5 / 84 mm
Weight	12.1 ": 3800 g / 15.6 ": 4900 g / 18.5 ": 6400 g / 21.5 ": 7800 g	12.1 ": 3800 g / 15.6 ": 4900 g / 18.5 ": 6400 g / 21.5 ": 7800 g
Protection degree	IP66	IP66
Voltage supply	24 V DC (18-32 V DC) isolated	24 V DC (18-32 V DC) isolated
Humidity	80% relative humidity (without condensation)	80% relative humidity (without condensation)
Operating temperature	0 °C ... +50 °C	0 °C ... +50 °C
Storage temperature	-20 °C ... +60 °C	-20 °C ... +60 °C
Approvals	CE, EN 61000-3-2,-3, EN 55022, EN 55024, EN 60950-1, cULus LISTED (UL 61010)	CE, EN 61000-3-2,-3, EN 55022, EN 55024, EN 60950-1, cULus LISTED (UL 61010)
System data		
Processor	Intel® Celeron® 3765U - Dual Core 1.9 GHz	Intel® Core™ i5-5350U - Dual Core 1.8 GHz (2.9 GHz Turbo)
RAM	4 GB, DDR3	8 GB, DDR3
Memory	60 GB mSATA SSD	120 GB mSATA SSD
Operating system	Windows 10 IoT Enterprise LTSC 2019 64bit - Value	Windows 10 IoT Enterprise LTSC 2019 64bit - Value
Interfaces behind	3x Ethernet 10/100/1000 MBit/s (RJ45), 2x USB 3.0, 1x USB 2.0, 1x DVI-I, 1x RS232 (DB9M)	3x Ethernet 10/100/1000 MBit/s (RJ45), 2x USB 3.0, 1x USB 2.0, 1x DVI-I, 1x RS232 (DB9M)
Equipment		
Number of displayable colours	16 M	16 M
Material display	Glass	Glass
Material frame	Aluminium	Aluminium
Touch-Screen	capacitive, MultiTouch	capacitive, MultiTouch
Note		

Ordering data

	Type	Qty.	Order No.	Type	Qty.	Order No.
Display size: 12.1", Resolution: 1280 x 800, Luminance: 400 cd/m²	UV66-ADV-12-IPPC-3001.01	1	**2676510000**	UV66-ADV-12-IPPC-3022.01	1	**2676520000**
Display size: 15.6", Resolution: 1366 x 768, Luminance: 400 cd/m²	UV66-ADV-15-IPPC-3001.01	1	**2676530000**	UV66-ADV-15-IPPC-3022.01	1	**2676540000**
Display size: 18.5", Resolution: 1366 x 768, Luminance: 300 cd/m²	UV66-ADV-18-IPPC-3001.01	1	**2676550000**	UV66-ADV-18-IPPC-3022.01	1	**2676560000**
Display size: 21.5", Resolution: 1920 x 1080, Luminance: 300 cd/m²	UV66-ADV-21-IPPC-3001.01	1	**2676570000**	UV66-ADV-21-IPPC-3022.01	1	**2676580000**
Note						

Monitore - 10

UV66-ADV-XX-IPM-10

Technical data

General data	
Width / Height / Depth	293 / 212 / 69 mm
Weight	10.1 ": 4900 g / 12.1 ": 5200 g / 15.6 ": 6000 g / 18.5 ": 7300 g / 21.5 ": 8400 g
Protection degree	IP66
Voltage supply	24 V DC isolated
Humidity	80% relative humidity (without condensation)
Operating temperature	0 °C ... +50 °C
Storage temperature	-5 °C ... +60 °C
Approvals	CE, EN 61000-3-2,-3, EN 55022, EN 55024, EN 60950-1, cULus, UL 508

Equipment	
Number of displayable colours	16 M
Material display	Glass
Material frame	Aluminium
Touch-Screen	capacitive, MultiTouch
Interfaces behind	1x VGA, 1x DVI-D, 2x USB 2.0
Note	

Ordering data

	Type	Qty.	Order No.
Display size: 10.1", Resolution: 1280 x 800, Luminance: 400 cd/m²	UV66-ADV-10-IPM-10	1	**2676660000**
Display size: 12.1", Resolution: 1280 x 800, Luminance: 400 cd/m²	UV66-ADV-12-IPM-10	1	**2676670000**
Display size: 15.6", Resolution: 1366 x 768, Luminance: 400 cd/m²	UV66-ADV-15-IPM-10	1	**2676680000**
Display size: 18.5", Resolution: 1366 x 768, Luminance: 300 cd/m²	UV66-ADV-18-IPM-10	1	**2676690000**
Display size: 21.5", Resolution: 1920 x 1080, Luminance: 300 cd/m²	UV66-ADV-21-IPM-10	1	**2676700000**
Note			

Engineering- & visualisation tools
u-create

Engineering- & visualisation tools
u-create

u-create studio	F.2
u-create web	F.3
u-create PROCON-WEB	F.6
Continue Softwaretools	F.8

Automate with a customized open platform

u-create studio - the new standard for Codesys and C/ C++ engineering

u-create studio enables flexible and modular programming within your application and provides simple configuration and diagnosis of your system. An OPC-UA server is also available for standardized M2M communication.

Thanks to the open Linux architecture, u-create studio is a particularly flexible automation system that gives you a multitude of options for the individual installation of software modules. IEC 61131-3-compliant programming based on CODESYS Version 3 has proven its worth.
especially proven. Additionally u-create studio offers object-oriented programming with C/C++ environment. Powerful debugging and a trace tool support fast error analysis during programming. The fieldbus masters EtherCAT and Modbus TCP Master as well as CANopen are also implemented. u-create studio is the optimally coordinated engineering tool for our u-control 2000 controller.

Your special advantages:

- CODESYS V3.5 engineering environment according to IEC 61131-3
- Additional programming option in C / C++
- Powerful debugging
- Integrated fieldbus master (EtherCAT, Modbus TCP Master and optional CANopen)

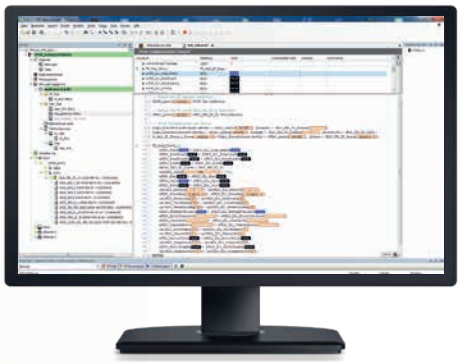

Type	Operating system	Configurable target systems	Software extensions	Order No.	Qty.
U-CREATE-STUDIO	Windows 7, Windows 10	u-control studio hardware	OPC-UA server, Visualisation with u-create PROCON-WEB	2660130000	1

Future-proof automation for intelligent production

Innovative control system with platform-independent u-create web engineering tool

Worldwide networking, growing data exchange and customer-specific production require more flexible automation solutions. With u-create web, we provide plant and machine manufacturers with open, web-based and safe control software for the automation of small and medium-sized plants.

u-create web is a web-based engineering software for configuration, system parameterization and programming according to IEC 61131-3. The software is installed directly on the hardware and requires no further installation on a computer. This means that the software can be used as an engineering platform independently of the hardware and operating system. The integrated smartvisu enables visualization of the project within programming. The range of functions can be extended by additional software apps (e.g. OPC UA server/ client module; u-create PROCON-WEB module; etc.). Due to the integration of Node RED, u-create web is also suitable for tasks in Industrial IoT and thus combines both disciplines in one housing.

u-create web in combination with the u-control 2000 controller and the I/O system u-remote the optimal automation solution for your plant.

Your special advantages:

- Web-based engineering software
- Platform- and device-independent programming via web browser
- Programming standard according to IEC 61131-3
- Use of standardized web technologies such as HTML5

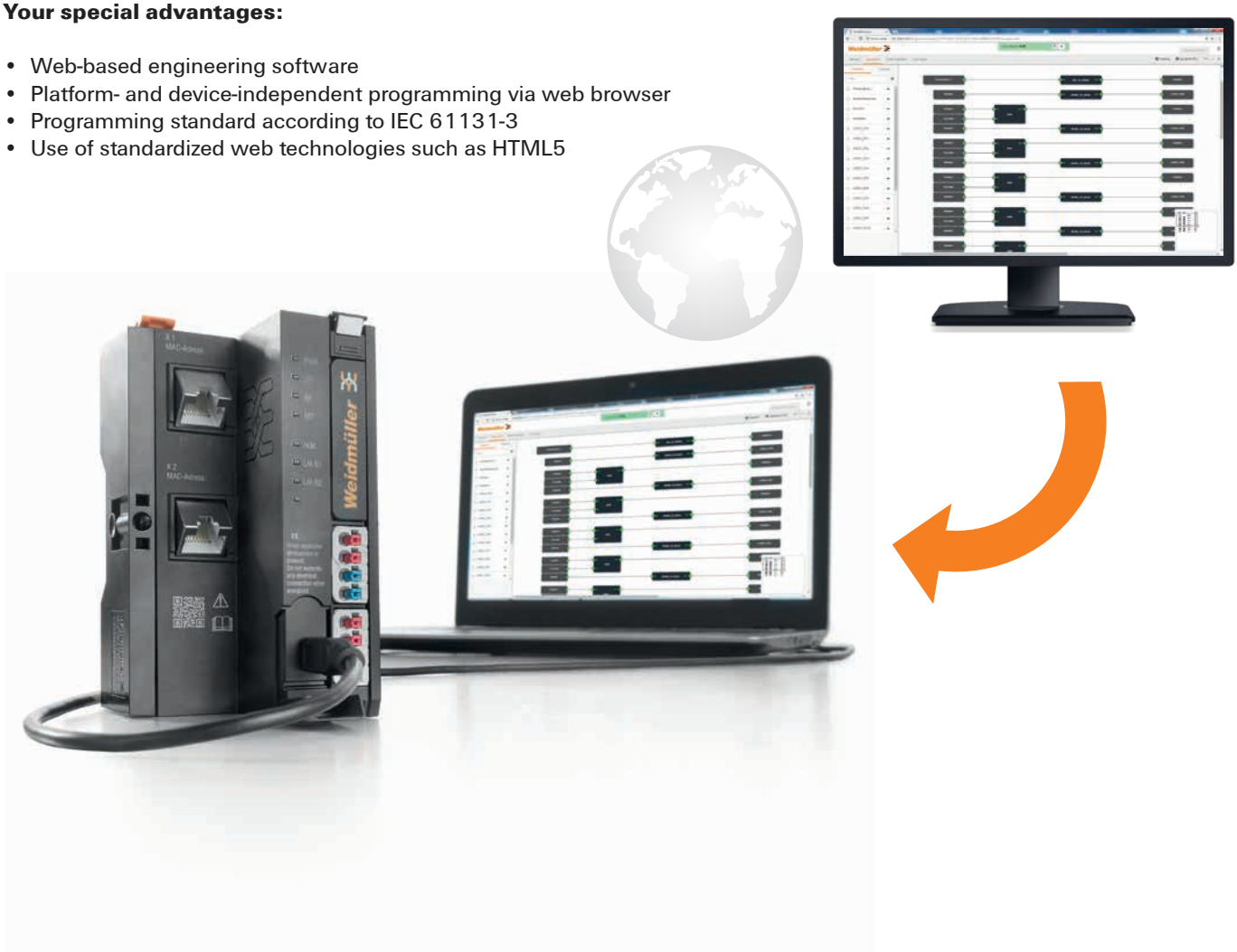

Programming and communicating in the Cloud

Node-RED integrated in u-create web for optimal IoT communication

The requirement of modern plants is not only the safe control, but also the safety, to send machine data directly to a cloud. u-create web offers in combination with the Node-RED module the possibility to obtain sensor information of u-remote I/O modules and transfer them to the cloud via MQTT or AMQP.

The data can be sent directly to the cloud via Node-RED. The web-based software environment of u-create web is device- and platform independent. The Secruity-by-Design concept guarantees a high safety standard.

u-create web with integrated Node-RED module is cross-platform. and can be used with any common browser, the HTML5, CSS and JavaScript supported.

The cloud providers Microsoft Azure, IBM Cloud and Amazon aws are supported. The Node-RED application is easily accessible via the web server of the u-control 2000 and is compatible with our u-remote I/O modules.

Your special advantages:

- Web-based software
- Platform- and device-independent programming via web browser
- Future-proof thanks to the use of standardized web technologies such as HTML5
- Intuitive implementation of IoT applications thanks to Node-RED

Forward-looking flexibility through web-based visualisation

u-create PROCON-WEB – the scalable and platform-independent HMI software

The growing integration of machines and systems places entirely new demands on HMI software. Easily scalable and platform-independent visualisation solutions ensure maximal flexibility and guarantee the availability of all relevant machine data on site.

u-create PROCON-WEB simplifies project planning with dynamic, multi-touch capable visualisation solutions for your automation. The integrated web server allows the use of different HTML5-capable clients without the installation of additional software. The extensive portfolio of communication drivers allows flexible integration into existing or new machines and systems.

u-create PROCON-WEB is integrated on u-control hardware too and together with u-view touch panels enables highly functional automation solutions from a single source.

F

Your special advantages:

- Web-based and platform-independent
- Dynamic user interfaces with adaptive design
- Full compatible to our u-control controls, including attractive license concept
- Comprehensive portfolio of drivers for access to the controllers of all established offerer
- Easy integration of different languages through Unicode
- Efficient engineering due to object-oriented layout/container and Class/Instance Concepts
- Fine-grained user and rights management

Ordering data u-create PROCON-WEB

Type	Number of process variables, max.	Configurable target systems	Operating system	Order No.	Qty.
Engineering software for Windows and u-control visualisation projects					
U-CREATE-PROCON-WEB-D-200	200	Windows Runtime & u-control Runtime	Windows	**2705640000**	1
U-CREATE-PROCON-WEB-D-500	500	Windows Runtime & u-control Runtime	Windows	**2705650000**	1
U-CREATE-PROCON-WEB-D-1000	1000	Windows Runtime & u-control Runtime	Windows	**2705660000**	1
U-CREATE-PROCON-WEB-D-2000	2000	Windows Runtime & u-control Runtime	Windows	**2705670000**	1
U-CREATE-PROCON-WEB-D-5000	5000	Windows Runtime & u-control Runtime	Windows	**2705680000**	1
Engineering software for u-control visualisation projects					
U-CREATE-PROCON-WEB-D-UC-100	100	u-control Runtime	Windows	**2705820000**	1
U-CREATE-PROCON-WEB-D-UC-2000	2000	u-control Runtime	Windows	**2705830000**	1
U-CREATE-PROCON-WEB-D-UC-5000	5000	u-control Runtime	Windows	**2705840000**	1

Type	Number of process variables, max.	Number of devices	Number of mobile devices	Platform for runtime system	Order No.	Qty.
Runtime licenses for Windows-based industrial PCs						
U-CREATE-PROCON-WEB-RT-200	200	1	1	Windows	**2705730000**	1
U-CREATE-PROCON-WEB-RT-500	500	1	1	Windows	**2705740000**	1
U-CREATE-PROCON-WEB-RT-1000	1000	1	1	Windows	**2705750000**	1
U-CREATE-PROCON-WEB-RT-2000	2000	1	1	Windows	**2705760000**	1
U-CREATE-PROCON-WEB-RT-5000	5000	1	1	Windows	**2705770000**	1
Runtime licenses for u-control						
U-CREATE-PROCON-WEB-RT-UC-100	100	1	1	u-control	**Free available on u-control**	1
U-CREATE-PROCON-WEB-RT-UC-2000	2000	2	2	u-control	**2708630000**	1
U-CREATE-PROCON-WEB-RT-UC-5000	5000	2	2	u-control	**2708640000**	1

Portfolio overview additional Weidmüller software

In addition to the software tools listed here, Weidmüller offers a wide range of software from a wide variety of areas that are important for the industrial process and its optimisation.

u-link remote access
u-link guarantees a quick and secure access to machines and plants while also allowing for efficient management of production plants, user clients, access rights or firmware versions. The intuitive u-link interfaces are quick and easy to configure without expert knowledge and adaptable to specific processes. Safeguarded servers in Europe also provide an online platform that ensures conformity between different IT systems when carrying out remote maintenance.

u-create ResMa
Use u-create ResMa as a universal tool for acquiring, visualizing and monitoring your data. u-create ResMa is a comprehensive software for industrial data acquisition. No matter whether you want to record your machine data, implement a production data acquisition system or set up an energy management system according to ISO 50001 - ResMa grows with your requirements. ResMa offers the necessary support with the integration into the existing automation technology, control technology and building automation as well as integration into the company's IT.

You can choose between the three versions Compact, Server or Cloud, whereby we can react flexibly to your requirements at any time and can quickly and easily switch from one to the other version. We offer you advice for your project and can take care of all the required services for set up, implementation and training as well as the instruction of employees. And of course we also offer components for measuring technology and infrastructure to provide you with the best possible service.

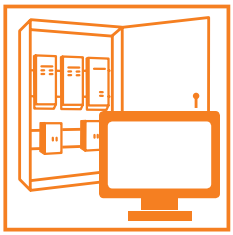

u-create ResMa Compact
Ready installed entry-level solution on a compact industry PC for installation on a DIN rail in the control cabinet. Direct connection of meters via Modbus RTU or Modbus TCP. Unrestricted evaluation and reporting

u-create ResMa Server
Scalable solution for installation on a dedicated or virtual server. No restriction of the functional scope and extensive options for integration of external systems. PlugIn concept for customer-specific extensions.

u-create ResMa Cloud
u-create ResMa as a scalable cloud solution on a rental basis. Quick start of in-house energy management system, also across locations without own internal infrastructure. Rental price credited against a purchase licence.

Service and support

Service and support	Our expertise for your requirements	V.2
	Benefit from optimum support when using our products	V.4

Our expertise for your requirements
Service connects - worldwide

Automation technology functions are becoming more complex in a globally-oriented world facing ambitious targets in terms of energy efficiency and smart production. We are your equal partners for the best connections in Industrial Connectivity. Our worldwide network of industrial managers for machine construction, process automation, energy and traffic engineering and for device manufacturers know the challenges you face and can support you in your specific applications.

Training course on technologies, applications and the detailed functionality of our products is available to you locally or at our headquarter in Germany. Our personal support can answer any questions reliably and expertly. Our online services are available 365 day a year around the clock to provide answers to your questions on our products - from user documentation through software to planning tools.

In short: Weidmüller's global service combines our expertise with your requirements.

Professional advice on planning
Our global network of industrial managers has extensive experience in automation technology and electrical connectivity. This expertise allows us to assist you with advice and planning support in order to work with you on resolving the everyday challenges of your applications.

Technology and application training
Industrial automation is moving towards smart production. It faces the challenges of new technologies and applications. Our varied range of training courses develops this knowledge further or provides more in-depth information on the handling of our products and solutions. Our seminars are modular and can be customised. We can train you and your employees in our academy, on your premises if you wish or online in our webinars at any time.

Customised installation
The challenges for the future are reducing costs and increasing efficiency. This requires intelligent, individual solutions which are tailored to your requirements. We can offer a highly qualified customer-specific production service in our application centre. Whether you need modified products, pre-assembled terminal rails or complete small cabinets: we produce the solutions developed for your application quickly and flexibly.

Online support and downloads

Exactly the right help and information on our solutions and products

If our products are used in your automation technology applications, you need the best possible individual support, from planning through installation to operation.

For every stage of your application, we can offer the right tools and information for our products and solutions. Up-to-date, uncomplicated, comprehensive and around the clock via our service portal at www.weidmueller.com/service.

Fast access to our support and services is available via Weidmüller webcodes. Simply select the service you want on the right hand side, then enter the webcode made up of five digits with a preceding hashtag into the search field in the top right corner of www.weidmueller.com and it will bring up the details you need.

Online and personal support

From planning through installation to operation, we can provide exactly the right help and information for each step of your application based on our solutions and products: up-to-date, uncomplicated and comprehensive, around the clock, online or in person.

Visit our website for more information

www.weidmueller.com/service

Let's connect.

Engineering Support

As a developer, you need simple processes and system-wide tools. We support you in your development environment with comprehensive data, software tools and interfaces, product selection guides and development samples.

Technical data and downloads

Download all the documents and software relating to our products by simply entering the item number. You can also view our Online Catalogue and research the technical properties of our products.

Commercial support

Integrate our product data into your commercial sytem using standardised interfaces or familiarise yourself with the wide range of products in our technical catalogues.

Engineering data
Webcode #01219

Find downloads
Webcode #11379

Electronic catalogue in BMECat format and other formats
Webcode #11378

Product software
Webcode #01212

Products in the Online Catalogue
Webcode #01217

Access our Webshop
Webcode #11382

Whitepaper for device connectivity
Webcode #11359

Security Advisory Board
Webcode #11424

Technical catalogue in PDF Format
Webcode #01218

Engineering software
Webcode #11377

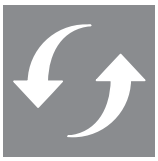

Product Change Notification
Webcode #11425

Product configurators, product selection guides and samples
Webcode #01214

More offers in online support and downloads

Not found what you are looking for? We have even more to offer you in online support and downloads.

Approvals, certificates and declaration of conformity
Webcode #11374

Here you will find information on the CE declaration of conformity, on RoHS and REACH and other company related certificates and approvals.

Index

Index	Index Type	X.2
	Index Order No.	X.8

Type	Order No.	Page
A		
AM 12	9030060000	C.34
AM 12	9030060000	C.35
AM 12	9030060000	C.36
B		
BATTERY-CR1220-3V	2684410000	A.4
BATTERY-CR1220-3V	2684410000	A.5
BATTERY-CR1220-3V	2684410000	A.6
BLDZ DN5.08/05/180F GY BX PRT	1919990000	B.15
BLZ DN 5.08/05/180F AU GY BX PRT	1933550000	B.15
D		
DEK 5/8-11.5 MC NE WS	1341630000	A.4
DEK 5/8-11.5 MC NE WS	1341630000	A.5
DEK 5/8-11.5 MC NE WS	1341630000	A.6
DEK 5/8-11.5 MC NE WS	1341630000	B.100
DEK 5/8-11.5 MC NE WS	1341630000	B.101
DEK 5/8-11.5 MC NE WS	1341630000	B.102
DEK 5/8-11.5 MC NE WS	1341630000	B.103
DEK 5/8-11.5 MC NE WS	1341630000	B.104
DEK 5/8-11.5 MC NE WS	1341630000	B.105
DEK 5/8-11.5 MC NE WS	1341630000	B.107
DEK 5/8-11.5 MC NE WS	1341630000	B.108
DEK 5/8-11.5 MC NE WS	1341630000	B.11
DEK 5/8-11.5 MC NE WS	1341630000	B.111
DEK 5/8-11.5 MC NE WS	1341630000	B.112
DEK 5/8-11.5 MC NE WS	1341630000	B.115
DEK 5/8-11.5 MC NE WS	1341630000	B.13
DEK 5/8-11.5 MC NE WS	1341630000	B.15
DEK 5/8-11.5 MC NE WS	1341630000	B.17
DEK 5/8-11.5 MC NE WS	1341630000	B.19
DEK 5/8-11.5 MC NE WS	1341630000	B.21
DEK 5/8-11.5 MC NE WS	1341630000	B.22
DEK 5/8-11.5 MC NE WS	1341630000	B.23
DEK 5/8-11.5 MC NE WS	1341630000	B.24
DEK 5/8-11.5 MC NE WS	1341630000	B.25
DEK 5/8-11.5 MC NE WS	1341630000	B.26
DEK 5/8-11.5 MC NE WS	1341630000	B.27
DEK 5/8-11.5 MC NE WS	1341630000	B.28
DEK 5/8-11.5 MC NE WS	1341630000	B.29
DEK 5/8-11.5 MC NE WS	1341630000	B.30
DEK 5/8-11.5 MC NE WS	1341630000	B.31
DEK 5/8-11.5 MC NE WS	1341630000	B.32
DEK 5/8-11.5 MC NE WS	1341630000	B.33
DEK 5/8-11.5 MC NE WS	1341630000	B.34
DEK 5/8-11.5 MC NE WS	1341630000	B.35
DEK 5/8-11.5 MC NE WS	1341630000	B.37
DEK 5/8-11.5 MC NE WS	1341630000	B.38
DEK 5/8-11.5 MC NE WS	1341630000	B.39
DEK 5/8-11.5 MC NE WS	1341630000	B.40
DEK 5/8-11.5 MC NE WS	1341630000	B.41
DEK 5/8-11.5 MC NE WS	1341630000	B.42
DEK 5/8-11.5 MC NE WS	1341630000	B.43
DEK 5/8-11.5 MC NE WS	1341630000	B.44
DEK 5/8-11.5 MC NE WS	1341630000	B.45
DEK 5/8-11.5 MC NE WS	1341630000	B.46
DEK 5/8-11.5 MC NE WS	1341630000	B.47
DEK 5/8-11.5 MC NE WS	1341630000	B.48
DEK 5/8-11.5 MC NE WS	1341630000	B.49
DEK 5/8-11.5 MC NE WS	1341630000	B.5
DEK 5/8-11.5 MC NE WS	1341630000	B.50
DEK 5/8-11.5 MC NE WS	1341630000	B.51
DEK 5/8-11.5 MC NE WS	1341630000	B.53
DEK 5/8-11.5 MC NE WS	1341630000	B.55
DEK 5/8-11.5 MC NE WS	1341630000	B.56
DEK 5/8-11.5 MC NE WS	1341630000	B.57
DEK 5/8-11.5 MC NE WS	1341630000	B.59
DEK 5/8-11.5 MC NE WS	1341630000	B.60
DEK 5/8-11.5 MC NE WS	1341630000	B.61
DEK 5/8-11.5 MC NE WS	1341630000	B.62
DEK 5/8-11.5 MC NE WS	1341630000	B.63
DEK 5/8-11.5 MC NE WS	1341630000	B.64
DEK 5/8-11.5 MC NE WS	1341630000	B.65
DEK 5/8-11.5 MC NE WS	1341630000	B.66
DEK 5/8-11.5 MC NE WS	1341630000	B.67
DEK 5/8-11.5 MC NE WS	1341630000	B.68
DEK 5/8-11.5 MC NE WS	1341630000	B.7
DEK 5/8-11.5 MC NE WS	1341630000	B.71
DEK 5/8-11.5 MC NE WS	1341630000	B.72
DEK 5/8-11.5 MC NE WS	1341630000	B.73
DEK 5/8-11.5 MC NE WS	1341630000	B.74
DEK 5/8-11.5 MC NE WS	1341630000	B.75
DEK 5/8-11.5 MC NE WS	1341630000	B.77
DEK 5/8-11.5 MC NE WS	1341630000	B.79
DEK 5/8-11.5 MC NE WS	1341630000	B.81
DEK 5/8-11.5 MC NE WS	1341630000	B.82
DEK 5/8-11.5 MC NE WS	1341630000	B.83
DEK 5/8-11.5 MC NE WS	1341630000	B.84
DEK 5/8-11.5 MC NE WS	1341630000	B.85
DEK 5/8-11.5 MC NE WS	1341630000	B.86
DEK 5/8-11.5 MC NE WS	1341630000	B.89
DEK 5/8-11.5 MC NE WS	1341630000	B.9
DEK 5/8-11.5 MC NE WS	1341630000	B.90
DEK 5/8-11.5 MC NE WS	1341630000	B.91
DEK 5/8-11.5 MC NE WS	1341630000	B.92
DEK 5/8-11.5 MC NE WS	1341630000	B.93
DEK 5/8-11.5 MC NE WS	1341630000	B.94
DEK 5/8-11.5 MC NE WS	1341630000	B.95
DEK 5/8-11.5 MC NE WS	1341630000	B.96
DEK 5/8-11.5 MC NE WS	1341630000	B.99
E		
ESG 5/10 MC NE WS	1919940000	C.13
ESG 8/13.5/43.3 SAI AU	1912130000	C.19
ESG 8/13.5/43.3 SAI AU	1912130000	C.20
ESG 8/13.5/43.3 SAI AU	1912130000	C.21
ESG 8/13.5/43.3 SAI AU	1912130000	C.22
ESG 8/13.5/43.3 SAI AU	1912130000	C.25
ESG 8/13.5/43.3 SAI AU	1912130000	C.26
ESG 8/13.5/43.3 SAI AU	1912130000	C.27
ESG 8/13.5/43.3 SAI AU	1912130000	C.28
ESG 8/13.5/43.3 SAI AU	1912130000	C.29
ESG 8/13.5/43.3 SAI AU	1912130000	C.30
ESG 9/20 MC NE WS	1609940000	C.14
ESG-M 8/20 MC NE WS	1027290000	C.15
ESG-M 8/20 MC NE WS	1027290000	C.16
ESG-M 8/20 MC NE WS	1027290000	C.4
ESG-M 8/20 MC NE WS	1027290000	C.5
ESG-M 8/20 MC NE WS	1027290000	C.6
ESG-M 8/20 MC NE WS	1027290000	C.7
ESG-M 8/20 MC NE WS	1027290000	C.8
ESO UR20 DIN A4 WS	1429430000	A.4
ESO UR20 DIN A4 WS	1429430000	A.5
ESO UR20 DIN A4 WS	1429430000	A.6
ESO UR20 DIN A4 WS	1429430000	B.100
ESO UR20 DIN A4 WS	1429430000	B.101
ESO UR20 DIN A4 WS	1429430000	B.102
ESO UR20 DIN A4 WS	1429430000	B.103
ESO UR20 DIN A4 WS	1429430000	B.104
ESO UR20 DIN A4 WS	1429430000	B.105
ESO UR20 DIN A4 WS	1429430000	B.107
ESO UR20 DIN A4 WS	1429430000	B.108
ESO UR20 DIN A4 WS	1429430000	B.11
ESO UR20 DIN A4 WS	1429430000	B.111
ESO UR20 DIN A4 WS	1429430000	B.112
ESO UR20 DIN A4 WS	1429430000	B.115
ESO UR20 DIN A4 WS	1429430000	B.13
ESO UR20 DIN A4 WS	1429430000	B.15
ESO UR20 DIN A4 WS	1429430000	B.17
ESO UR20 DIN A4 WS	1429430000	B.19
ESO UR20 DIN A4 WS	1429430000	B.22
ESO UR20 DIN A4 WS	1429430000	B.23
ESO UR20 DIN A4 WS	1429430000	B.24
ESO UR20 DIN A4 WS	1429430000	B.25
ESO UR20 DIN A4 WS	1429430000	B.26
ESO UR20 DIN A4 WS	1429430000	B.27
ESO UR20 DIN A4 WS	1429430000	B.28
ESO UR20 DIN A4 WS	1429430000	B.29
ESO UR20 DIN A4 WS	1429430000	B.30
ESO UR20 DIN A4 WS	1429430000	B.31
ESO UR20 DIN A4 WS	1429430000	B.32
ESO UR20 DIN A4 WS	1429430000	B.33
ESO UR20 DIN A4 WS	1429430000	B.34
ESO UR20 DIN A4 WS	1429430000	B.35
ESO UR20 DIN A4 WS	1429430000	B.37
ESO UR20 DIN A4 WS	1429430000	B.38
ESO UR20 DIN A4 WS	1429430000	B.39
ESO UR20 DIN A4 WS	1429430000	B.40
ESO UR20 DIN A4 WS	1429430000	B.41
ESO UR20 DIN A4 WS	1429430000	B.42
ESO UR20 DIN A4 WS	1429430000	B.43
ESO UR20 DIN A4 WS	1429430000	B.44
ESO UR20 DIN A4 WS	1429430000	B.45
ESO UR20 DIN A4 WS	1429430000	B.46
ESO UR20 DIN A4 WS	1429430000	B.47
ESO UR20 DIN A4 WS	1429430000	B.48
ESO UR20 DIN A4 WS	1429430000	B.50
ESO UR20 DIN A4 WS	1429430000	B.51
ESO UR20 DIN A4 WS	1429430000	B.55
ESO UR20 DIN A4 WS	1429430000	B.56
ESO UR20 DIN A4 WS	1429430000	B.59
ESO UR20 DIN A4 WS	1429430000	B.60
ESO UR20 DIN A4 WS	1429430000	B.61
ESO UR20 DIN A4 WS	1429430000	B.62
ESO UR20 DIN A4 WS	1429430000	B.63
ESO UR20 DIN A4 WS	1429430000	B.64
ESO UR20 DIN A4 WS	1429430000	B.65
ESO UR20 DIN A4 WS	1429430000	B.66
ESO UR20 DIN A4 WS	1429430000	B.67
ESO UR20 DIN A4 WS	1429430000	B.7
ESO UR20 DIN A4 WS	1429430000	B.71
ESO UR20 DIN A4 WS	1429430000	B.72
ESO UR20 DIN A4 WS	1429430000	B.73
ESO UR20 DIN A4 WS	1429430000	B.74
ESO UR20 DIN A4 WS	1429430000	B.75
ESO UR20 DIN A4 WS	1429430000	B.77
ESO UR20 DIN A4 WS	1429430000	B.79
ESO UR20 DIN A4 WS	1429430000	B.81
ESO UR20 DIN A4 WS	1429430000	B.82
ESO UR20 DIN A4 WS	1429430000	B.83
ESO UR20 DIN A4 WS	1429430000	B.84
ESO UR20 DIN A4 WS	1429430000	B.85
ESO UR20 DIN A4 WS	1429430000	B.86
ESO UR20 DIN A4 WS	1429430000	B.89
ESO UR20 DIN A4 WS	1429430000	B.9
ESO UR20 DIN A4 WS	1429430000	B.90
ESO UR20 DIN A4 WS	1429430000	B.91
ESO UR20 DIN A4 WS	1429430000	B.92
ESO UR20 DIN A4 WS	1429430000	B.93
ESO UR20 DIN A4 WS	1429430000	B.94
ESO UR20 DIN A4 WS	1429430000	B.95
ESO UR20 DIN A4 WS	1429430000	B.96
ESO UR20 DIN A4 WS	1429430000	B.99
I		
IE-C5DD4UG0015MCSA20-E	1044470015	C.4
IE-C5DD4UG0015MCSA20-E	1044470015	C.5
IE-C5DD4UG0015MCSA20-E	1044470015	C.6
IE-C5DD4UG0015MCSMCS-E	1025950015	C.4
IE-C5DD4UG0015MCSMCS-E	1025950015	C.5
IE-C5DD4UG0015MCSMCS-E	1025950015	C.6
IE-C5DD4UG0015MCSMCS-E	1025950015	C.7
IE-C5DD4UG0015MCSMCS-E	1025950015	C.8
IE-USB-A-MICRO-1.8M	1487980000	A.4
IE-USB-A-MICRO-1.8M	1487980000	A.5
IE-USB-A-MICRO-1.8M	1487980000	A.6
IE-USB-A-MICRO-1.8M	1487980000	B.11
IE-USB-A-MICRO-1.8M	1487980000	B.111
IE-USB-A-MICRO-1.8M	1487980000	B.13
IE-USB-A-MICRO-1.8M	1487980000	B.15
IE-USB-A-MICRO-1.8M	1487980000	B.17
IE-USB-A-MICRO-1.8M	1487980000	B.19
IE-USB-A-MICRO-1.8M	1487980000	B.5
IE-USB-A-MICRO-1.8M	1487980000	B.7
IE-USB-A-MICRO-1.8M	1487980000	B.9
K		
KOSM BHZ5.00	1483050000	A.4
KOSM BHZ5.00	1483050000	A.5
KOSM BHZ5.00	1483050000	A.6
KOSM BHZ5.00	1483050000	B.100
KOSM BHZ5.00	1483050000	B.101
KOSM BHZ5.00	1483050000	B.102
KOSM BHZ5.00	1483050000	B.103
KOSM BHZ5.00	1483050000	B.104
KOSM BHZ5.00	1483050000	B.105
KOSM BHZ5.00	1483050000	B.107
KOSM BHZ5.00	1483050000	B.108
KOSM BHZ5.00	1483050000	B.11
KOSM BHZ5.00	1483050000	B.111
KOSM BHZ5.00	1483050000	B.112
KOSM BHZ5.00	1483050000	B.13
KOSM BHZ5.00	1483050000	B.15
KOSM BHZ5.00	1483050000	B.17
KOSM BHZ5.00	1483050000	B.19
KOSM BHZ5.00	1483050000	B.22
KOSM BHZ5.00	1483050000	B.23
KOSM BHZ5.00	1483050000	B.24
KOSM BHZ5.00	1483050000	B.25
KOSM BHZ5.00	1483050000	B.26
KOSM BHZ5.00	1483050000	B.27
KOSM BHZ5.00	1483050000	B.28
KOSM BHZ5.00	1483050000	B.29
KOSM BHZ5.00	1483050000	B.30
KOSM BHZ5.00	1483050000	B.31
KOSM BHZ5.00	1483050000	B.32
KOSM BHZ5.00	1483050000	B.33
KOSM BHZ5.00	1483050000	B.34
KOSM BHZ5.00	1483050000	B.35
KOSM BHZ5.00	1483050000	B.37
KOSM BHZ5.00	1483050000	B.38
KOSM BHZ5.00	1483050000	B.39
KOSM BHZ5.00	1483050000	B.40
KOSM BHZ5.00	1483050000	B.41
KOSM BHZ5.00	1483050000	B.42
KOSM BHZ5.00	1483050000	B.43
KOSM BHZ5.00	1483050000	B.44
KOSM BHZ5.00	1483050000	B.45
KOSM BHZ5.00	1483050000	B.46
KOSM BHZ5.00	1483050000	B.47
KOSM BHZ5.00	1483050000	B.48
KOSM BHZ5.00	1483050000	B.50
KOSM BHZ5.00	1483050000	B.51
KOSM BHZ5.00	1483050000	B.55
KOSM BHZ5.00	1483050000	B.56
KOSM BHZ5.00	1483050000	B.59
KOSM BHZ5.00	1483050000	B.60
KOSM BHZ5.00	1483050000	B.61
KOSM BHZ5.00	1483050000	B.62
KOSM BHZ5.00	1483050000	B.63
KOSM BHZ5.00	1483050000	B.64
KOSM BHZ5.00	1483050000	B.65
KOSM BHZ5.00	1483050000	B.66
KOSM BHZ5.00	1483050000	B.67
KOSM BHZ5.00	1483050000	B.7
KOSM BHZ5.00	1483050000	B.71
KOSM BHZ5.00	1483050000	B.72
KOSM BHZ5.00	1483050000	B.73
KOSM BHZ5.00	1483050000	B.74
KOSM BHZ5.00	1483050000	B.75
KOSM BHZ5.00	1483050000	B.77
KOSM BHZ5.00	1483050000	B.79
KOSM BHZ5.00	1483050000	B.81
KOSM BHZ5.00	1483050000	B.82
KOSM BHZ5.00	1483050000	B.83
KOSM BHZ5.00	1483050000	B.84
KOSM BHZ5.00	1483050000	B.85
KOSM BHZ5.00	1483050000	B.86
KOSM BHZ5.00	1483050000	B.89
KOSM BHZ5.00	1483050000	B.9
KOSM BHZ5.00	1483050000	B.90

Type	Order No.	Page
KOSM BHZ5.00	1483050000	B.91
KOSM BHZ5.00	1483050000	B.92
KOSM BHZ5.00	1483050000	B.93
KOSM BHZ5.00	1483050000	B.94
KOSM BHZ5.00	1483050000	B.95
KOSM BHZ5.00	1483050000	B.96
KOSM BHZ5.00	1483050000	B.99
KT 8	9002650000	C.34
KT 8	9002650000	C.35
KT 8	9002650000	C.36

M

MF 5/10 MC NE WS	1954050000	C.4
MULTI-STRIPAX 6-16	9202210000	B.25
MULTI-STRIPAX 6-16	9202210000	B.41
MULTI-STRIPAX 6-16	9202210000	B.62
MULTI-STRIPAX 6-16	9202210000	B.63
MULTI-STRIPAX 6-16	9202210000	B.64
MULTI-STRIPAX 6-16	9202210000	B.65
MULTI-STRIPAX 6-16	9202210000	B.85
MULTI-STRIPAX 6-16	9202210000	B.86

P

PAC-UNIV-HE20-LCH-1M	7789306010	B.27
PAC-UNIV-HE20-LCH-1M	7789306010	B.33
PAC-UNIV-HE20-LCH-1M	7789306010	B.34
PAC-UNIV-HE20-LCH-1M	7789306010	B.43
PAC-UNIV-HE20-LCH-1M	7789306010	B.48
PAC-UNIV-HE20-LCH-1M	7789306010	B.66
PM 2.7/2.6 MC NE WS	1323710000	A.4
PM 2.7/2.6 MC NE WS	1323710000	A.5
PM 2.7/2.6 MC NE WS	1323710000	A.6
PM 2.7/2.6 MC NE WS	1323710000	B.100
PM 2.7/2.6 MC NE WS	1323710000	B.101
PM 2.7/2.6 MC NE WS	1323710000	B.102
PM 2.7/2.6 MC NE WS	1323710000	B.103
PM 2.7/2.6 MC NE WS	1323710000	B.104
PM 2.7/2.6 MC NE WS	1323710000	B.105
PM 2.7/2.6 MC NE WS	1323710000	B.107
PM 2.7/2.6 MC NE WS	1323710000	B.108
PM 2.7/2.6 MC NE WS	1323710000	B.11
PM 2.7/2.6 MC NE WS	1323710000	B.111
PM 2.7/2.6 MC NE WS	1323710000	B.112
PM 2.7/2.6 MC NE WS	1323710000	B.115
PM 2.7/2.6 MC NE WS	1323710000	B.13
PM 2.7/2.6 MC NE WS	1323710000	B.15
PM 2.7/2.6 MC NE WS	1323710000	B.17
PM 2.7/2.6 MC NE WS	1323710000	B.19
PM 2.7/2.6 MC NE WS	1323710000	B.21
PM 2.7/2.6 MC NE WS	1323710000	B.22
PM 2.7/2.6 MC NE WS	1323710000	B.23
PM 2.7/2.6 MC NE WS	1323710000	B.24
PM 2.7/2.6 MC NE WS	1323710000	B.26
PM 2.7/2.6 MC NE WS	1323710000	B.27
PM 2.7/2.6 MC NE WS	1323710000	B.28
PM 2.7/2.6 MC NE WS	1323710000	B.29
PM 2.7/2.6 MC NE WS	1323710000	B.30
PM 2.7/2.6 MC NE WS	1323710000	B.31
PM 2.7/2.6 MC NE WS	1323710000	B.32
PM 2.7/2.6 MC NE WS	1323710000	B.33
PM 2.7/2.6 MC NE WS	1323710000	B.34
PM 2.7/2.6 MC NE WS	1323710000	B.35
PM 2.7/2.6 MC NE WS	1323710000	B.37
PM 2.7/2.6 MC NE WS	1323710000	B.39
PM 2.7/2.6 MC NE WS	1323710000	B.42
PM 2.7/2.6 MC NE WS	1323710000	B.43
PM 2.7/2.6 MC NE WS	1323710000	B.45
PM 2.7/2.6 MC NE WS	1323710000	B.46
PM 2.7/2.6 MC NE WS	1323710000	B.47
PM 2.7/2.6 MC NE WS	1323710000	B.48
PM 2.7/2.6 MC NE WS	1323710000	B.49
PM 2.7/2.6 MC NE WS	1323710000	B.5
PM 2.7/2.6 MC NE WS	1323710000	B.50
PM 2.7/2.6 MC NE WS	1323710000	B.51
PM 2.7/2.6 MC NE WS	1323710000	B.53
PM 2.7/2.6 MC NE WS	1323710000	B.55
PM 2.7/2.6 MC NE WS	1323710000	B.56
PM 2.7/2.6 MC NE WS	1323710000	B.57
PM 2.7/2.6 MC NE WS	1323710000	B.59
PM 2.7/2.6 MC NE WS	1323710000	B.60
PM 2.7/2.6 MC NE WS	1323710000	B.61
PM 2.7/2.6 MC NE WS	1323710000	B.66
PM 2.7/2.6 MC NE WS	1323710000	B.67
PM 2.7/2.6 MC NE WS	1323710000	B.68
PM 2.7/2.6 MC NE WS	1323710000	B.7
PM 2.7/2.6 MC NE WS	1323710000	B.71
PM 2.7/2.6 MC NE WS	1323710000	B.72
PM 2.7/2.6 MC NE WS	1323710000	B.73
PM 2.7/2.6 MC NE WS	1323710000	B.74
PM 2.7/2.6 MC NE WS	1323710000	B.75
PM 2.7/2.6 MC NE WS	1323710000	B.77
PM 2.7/2.6 MC NE WS	1323710000	B.79
PM 2.7/2.6 MC NE WS	1323710000	B.81
PM 2.7/2.6 MC NE WS	1323710000	B.82

Type	Order No.	Page
PM 2.7/2.6 MC NE WS	1323710000	B.83
PM 2.7/2.6 MC NE WS	1323710000	B.84
PM 2.7/2.6 MC NE WS	1323710000	B.89
PM 2.7/2.6 MC NE WS	1323710000	B.9
PM 2.7/2.6 MC NE WS	1323710000	B.90
PM 2.7/2.6 MC NE WS	1323710000	B.91
PM 2.7/2.6 MC NE WS	1323710000	B.92
PM 2.7/2.6 MC NE WS	1323710000	B.93
PM 2.7/2.6 MC NE WS	1323710000	B.94
PM 2.7/2.6 MC NE WS	1323710000	B.95
PM 2.7/2.6 MC NE WS	1323710000	B.96
PM 2.7/2.6 MC NE WS	1323710000	B.99
PM 2.7/2.6 MC SDR	1323700000	A.4
PM 2.7/2.6 MC SDR	1323700000	A.5
PM 2.7/2.6 MC SDR	1323700000	A.6
PM 2.7/2.6 MC SDR	1323700000	B.100
PM 2.7/2.6 MC SDR	1323700000	B.101
PM 2.7/2.6 MC SDR	1323700000	B.102
PM 2.7/2.6 MC SDR	1323700000	B.103
PM 2.7/2.6 MC SDR	1323700000	B.104
PM 2.7/2.6 MC SDR	1323700000	B.105
PM 2.7/2.6 MC SDR	1323700000	B.107
PM 2.7/2.6 MC SDR	1323700000	B.108
PM 2.7/2.6 MC SDR	1323700000	B.11
PM 2.7/2.6 MC SDR	1323700000	B.111
PM 2.7/2.6 MC SDR	1323700000	B.112
PM 2.7/2.6 MC SDR	1323700000	B.115
PM 2.7/2.6 MC SDR	1323700000	B.13
PM 2.7/2.6 MC SDR	1323700000	B.15
PM 2.7/2.6 MC SDR	1323700000	B.17
PM 2.7/2.6 MC SDR	1323700000	B.19
PM 2.7/2.6 MC SDR	1323700000	B.21
PM 2.7/2.6 MC SDR	1323700000	B.22
PM 2.7/2.6 MC SDR	1323700000	B.23
PM 2.7/2.6 MC SDR	1323700000	B.24
PM 2.7/2.6 MC SDR	1323700000	B.26
PM 2.7/2.6 MC SDR	1323700000	B.27
PM 2.7/2.6 MC SDR	1323700000	B.28
PM 2.7/2.6 MC SDR	1323700000	B.29
PM 2.7/2.6 MC SDR	1323700000	B.30
PM 2.7/2.6 MC SDR	1323700000	B.31
PM 2.7/2.6 MC SDR	1323700000	B.32
PM 2.7/2.6 MC SDR	1323700000	B.33
PM 2.7/2.6 MC SDR	1323700000	B.34
PM 2.7/2.6 MC SDR	1323700000	B.35
PM 2.7/2.6 MC SDR	1323700000	B.37
PM 2.7/2.6 MC SDR	1323700000	B.38
PM 2.7/2.6 MC SDR	1323700000	B.39
PM 2.7/2.6 MC SDR	1323700000	B.40
PM 2.7/2.6 MC SDR	1323700000	B.42
PM 2.7/2.6 MC SDR	1323700000	B.43
PM 2.7/2.6 MC SDR	1323700000	B.44
PM 2.7/2.6 MC SDR	1323700000	B.45
PM 2.7/2.6 MC SDR	1323700000	B.46
PM 2.7/2.6 MC SDR	1323700000	B.47
PM 2.7/2.6 MC SDR	1323700000	B.48
PM 2.7/2.6 MC SDR	1323700000	B.49
PM 2.7/2.6 MC SDR	1323700000	B.5
PM 2.7/2.6 MC SDR	1323700000	B.50
PM 2.7/2.6 MC SDR	1323700000	B.51
PM 2.7/2.6 MC SDR	1323700000	B.52
PM 2.7/2.6 MC SDR	1323700000	B.53
PM 2.7/2.6 MC SDR	1323700000	B.54
PM 2.7/2.6 MC SDR	1323700000	B.55
PM 2.7/2.6 MC SDR	1323700000	B.56
PM 2.7/2.6 MC SDR	1323700000	B.57
PM 2.7/2.6 MC SDR	1323700000	B.59
PM 2.7/2.6 MC SDR	1323700000	B.60
PM 2.7/2.6 MC SDR	1323700000	B.61
PM 2.7/2.6 MC SDR	1323700000	B.66
PM 2.7/2.6 MC SDR	1323700000	B.67
PM 2.7/2.6 MC SDR	1323700000	B.68
PM 2.7/2.6 MC SDR	1323700000	B.7
PM 2.7/2.6 MC SDR	1323700000	B.71
PM 2.7/2.6 MC SDR	1323700000	B.72
PM 2.7/2.6 MC SDR	1323700000	B.73
PM 2.7/2.6 MC SDR	1323700000	B.74
PM 2.7/2.6 MC SDR	1323700000	B.75
PM 2.7/2.6 MC SDR	1323700000	B.77
PM 2.7/2.6 MC SDR	1323700000	B.79
PM 2.7/2.6 MC SDR	1323700000	B.81
PM 2.7/2.6 MC SDR	1323700000	B.82
PM 2.7/2.6 MC SDR	1323700000	B.83
PM 2.7/2.6 MC SDR	1323700000	B.84
PM 2.7/2.6 MC SDR	1323700000	B.85
PM 2.7/2.6 MC SDR	1323700000	B.86
PM 2.7/2.6 MC SDR	1323700000	B.87
PM 2.7/2.6 MC SDR	1323700000	B.88
PM 2.7/2.6 MC SDR	1323700000	B.89
PM 2.7/2.6 MC SDR	1323700000	B.9
PM 2.7/2.6 MC SDR	1323700000	B.90
PM 2.7/2.6 MC SDR	1323700000	B.91
PM 2.7/2.6 MC SDR	1323700000	B.92
PM 2.7/2.6 MC SDR	1323700000	B.93
PM 2.7/2.6 MC SDR	1323700000	B.94
PM 2.7/2.6 MC SDR	1323700000	B.95
PM 2.7/2.6 MC SDR	1323700000	B.96
PM 2.7/2.6 MC SDR	1323700000	B.99
PWZ-UR20-HD	1525820000	B.25
PWZ-UR20-HD	1525820000	B.41
PWZ-UR20-HD	1525820000	B.62
PWZ-UR20-HD	1525820000	B.63
PWZ-UR20-HD	1525820000	B.64
PWZ-UR20-HD	1525820000	B.65
PWZ-UR20-HD	1525820000	B.85

Type	Order No.	Page
PWZ-UR20-HD	1525820000	B.86

R

RS 16IO 1W H S	9445700000	B.27
RS 16IO 1W H S	9445700000	B.33
RS 16IO 1W H S	9445700000	B.34
RS 16IO 1W H S	9445700000	B.43
RS 16IO 1W H S	9445700000	B.48
RS F20 LP2N 5/20	0224261001	B.66

S

SAI-AU M12 CAN 16DI	1906650000	C.19
SAI-AU M12 CAN 16DI	1906650000	C.38
SAI-AU M12 CAN 16DI/8DO	1906660000	C.19
SAI-AU M12 CAN 16DI/8DO	1906660000	C.38
SAI-AU M12 CAN AI/AO/DI	1906670000	C.20
SAI-AU M12 CAN AI/AO/DI	1906670000	C.38
SAI-AU M12 DN 16DI	1906700000	C.21
SAI-AU M12 DN 16DI	1906700000	C.38
SAI-AU M12 DN 16DI/8DO	1906710000	C.21
SAI-AU M12 DN 16DI/8DO	1906710000	C.38
SAI-AU M12 DN AI/AO/DI	1906720000	C.22
SAI-AU M12 DN AI/AO/DI	1906720000	C.38
SAI-AU M12 DN GW 16DI	1938570000	C.25
SAI-AU M12 DN GW 16DI	1938570000	C.38
SAI-AU M12 SB 2Counter	1938730000	C.28
SAI-AU M12 SB 2Counter	1938730000	C.38
SAI-AU M12 SB 4AI	1938690000	C.27
SAI-AU M12 SB 4AI	1938690000	C.38
SAI-AU M12 SB 4AO	1938700000	C.27
SAI-AU M12 SB 4AO	1938700000	C.38
SAI-AU M12 SB 4PT100	1938710000	C.30
SAI-AU M12 SB 4PT100	1938710000	C.38
SAI-AU M12 SB 4Thermo	1938720000	C.29
SAI-AU M12 SB 4Thermo	1938720000	C.38
SAI-AU M12 SB 8DI	1938610000	C.26
SAI-AU M12 SB 8DI	1938610000	C.38
SAI-AU M12 SB 8DIO	1938640000	C.26
SAI-AU M12 SB 8DIO	1938640000	C.38
SAI-AU M12 SB 8DO 2A	1938680000	C.26
SAI-AU M12 SB 8DO 2A	1938680000	C.38
SAI-AU M8 CAN 16DI	1906680000	C.19
SAI-AU M8 CAN 16DI	1906680000	C.38
SAI-AU M8 CAN 16DI/8DO	1906690000	C.19
SAI-AU M8 CAN 16DI/8DO	1906690000	C.38
SAI-AU M8 DN 16DI	1906730000	C.21
SAI-AU M8 DN 16DI	1906730000	C.38
SAI-AU M8 DN 16DI/8DO	1906740000	C.21
SAI-AU M8 DN 16DI/8DO	1906740000	C.38
SAI-AU M8 SB 8DI	1938600000	C.26
SAI-AU M8 SB 8DI	1938600000	C.38
SAI-AU M8 SB 8DIO	1938630000	C.26
SAI-AU M8 SB 8DIO	1938630000	C.38
SAI-AU M8 SB 8DO 2A	1938660000	C.26
SAI-AU M8 SB 8DO 2A	1938660000	C.38
SAIB-M-5/8S M12 5P A-COD	1784750000	C.19
SAIB-M-5/8S M12 5P A-COD	1784750000	C.20
SAIB-M-5/8S M12 5P A-COD	1784750000	C.21
SAIB-M-5/8S M12 5P A-COD	1784750000	C.22
SAIEND CAN-M12 5P A-COD	1784760000	C.19
SAIEND CAN-M12 5P A-COD	1784760000	C.20
SAIEND CAN-M12 5P A-COD	1784760000	C.21
SAIEND CAN-M12 5P A-COD	1784760000	C.22
SAIL-M12BG-3-1.5T	1968590150	C.34
SAIL-M12BG-3-1.5U	9457820150	C.34
SAIL-M12BG-3-1.5UGE	1092910150	C.34
SAIL-M12BG-3-1.5V	1925570150	C.34
SAIL-M12BG-4-1.5T	1968580150	C.34
SAIL-M12BG-4-1.5U	9457730150	C.34
SAIL-M12BG-4-1.5UGE	1092920150	C.34
SAIL-M12BG-4-1.5V	1925580150	C.34
SAIL-M12BW-3-1.5T	1968560150	C.34
SAIL-M12BW-3-1.5U	9457320150	C.34
SAIL-M12BW-3-1.5UGE	1092940150	C.34
SAIL-M12BW-3-1.5V	1925630150	C.34
SAIL-M12BW-3L1.5T	1004330150	C.36
SAIL-M12BW-3L1.5U	9457800150	C.36
SAIL-M12BW-3L1.5UGE	1114880150	C.36
SAIL-M12BW-3L1.5V	1925460150	C.36
SAIL-M12BW-4-1.5T	1968570150	C.34
SAIL-M12BW-4-1.5U	9457740150	C.34
SAIL-M12BW-4-1.5UGE	1092960150	C.34
SAIL-M12BW-4-1.5V	1925640150	C.34
SAIL-M12BW-4-2L1.5T	1007000150	C.36
SAIL-M12BW-4-2L1.5U	9456380150	C.36
SAIL-M12BW-4-2L1.5UGE	1092950150	C.36
SAIL-M12BW-4-2L1.5V	1925470150	C.36
SAIL-M12G-5-1.5U	9457610150	C.14
SAIL-M12G-5-1.5U	9457610150	C.15
SAIL-M12G-5-1.5U	9457610150	C.16
SAIL-M12G-5-1.5U	9457610150	C.4
SAIL-M12G-5-1.5U	9457610150	C.5
SAIL-M12G-5-1.5U	9457610150	C.6
SAIL-M12G-5-1.5U	9457610150	C.7
SAIL-M12G-5-1.5U	9457610150	C.8
SAIL-M12W-5-1.5U	9457670150	C.14
SAIL-M12W-5-1.5U	9457670150	C.15

Type	Order No.	Page
SAIL-M12W-5-1.5U	9457670150	C.16
SAIL-M12W-5-1.5U	9457670150	C.4
SAIL-M12W-5-1.5U	9457670150	C.5
SAIL-M12W-5-1.5U	9457670150	C.6
SAIL-M12W-5-1.5U	9457670150	C.7
SAIL-M12W-5-1.5U	9457670150	C.8
SAIL-M8BG-3-1.5U	9457450150	C.35
SAIL-M8BG-3-1.5UGE	1093190150	C.35
SAIL-M8BG-3-1.5V	1927240150	C.35
SAIL-M8BG-4-1.5U	9457850150	C.35
SAIL-M8BG-4-1.5UGE	1093200150	C.35
SAIL-M8BG-4-1.5V	1927260150	C.35
SAIL-M8BW-3-1.5U	9457380150	C.35
SAIL-M8BW-3-1.5UGE	1093220150	C.35
SAIL-M8BW-3-1.5V	1927320150	C.35
SAIL-M8BW-3L1.5U	9457460150	C.36
SAIL-M8BW-3L1.5UGE	1093210150	C.36
SAIL-M8BW-3L1.5V	1927350150	C.36
SAIL-M8BW-4-1.5U	9456150150	C.35
SAIL-M8BW-4-1.5UGE	1093240150	C.35
SAIL-M8BW-4-1.5V	1927340150	C.35
SAIL-M8BW-4L1.5U	1906400150	C.36
SAIL-M8BW-4L1.5UGE	1093230150	C.36
SAIL-M8BW-4L1.5V	1927360150	C.36
SAIL-M8G-3-1.5U	1824590150	C.13
SAIL-M8W-3-1.5U	1857550150	C.13
SAIL-URPM12G-4-1.5U	1475130150	C.33
SAIL-URPM12G-4-1.5V	1475320150	C.33
SAIL-URPM12G-C-1.5U	1475070150	C.33
SAIL-URPM12G-C-1.5V	1475280150	C.33
SAIL-URPM12G-O-1.5U	1475090150	C.33
SAIL-URPM12G-O-1.5V	1475300150	C.33
SAIL-URPM12W-2L-1.5U	1475450150	C.33
SAIL-URPM12W-2L-1.5V	1475500150	C.33
SAIL-URPM12W-4-1.5U	1475140150	C.33
SAIL-URPM12W-4-1.5V	1475330150	C.33
SAIL-URPM12W-C-1.5U	1475080150	C.33
SAIL-URPM12W-C-1.5V	1475290150	C.33
SAIL-URPM12W-O-1.5U	1475120150	C.33
SAIL-URPM12W-O-1.5V	1475310150	C.33
SAIL-URPM8G-3-1.5U	1475160150	C.33
SAIL-URPM8G-C-1.5V	1475340150	C.33
SAIL-URPM8W-2L-1.5U	1475470150	C.33
SAIL-URPM8W-2L-1.5V	1475510150	C.33
SAIL-URPM8W-3-1.5U	1475170150	C.33
SAIL-URPM8W-C-1.5V	1475350150	C.33
SAIL-URZM12G-C-1.5U	1475030150	C.33
SAIL-URZM12W-C-1.5U	1475040150	C.33
SAIL-URZM8G-3-1.5U	1475050150	C.33
SAIL-URZM8W-3-1.5U	1475060150	C.33
SAI-SCREWTY BOX	1939180000	C.34
SAI-SCREWTY BOX	1939180000	C.35
SAI-SCREWTY BOX	1939180000	C.36
SAI-SK M8	1802760000	C.19
SAI-SK M8	1802760000	C.20
SAI-SK M8	1802760000	C.21
SAI-SK M8	1802760000	C.22
SAI-SK M8	1802760000	C.26
SAI-SK M8	1802760000	C.27
SAI-SK M8	1802760000	C.28
SAI-SK M8	1802760000	C.29
SAI-SK M8	1802760000	C.30
SAI-SK-M12-UNI 2029	2330260000	C.19
SAI-SK-M12-UNI 2029	2330260000	C.20
SAI-SK-M12-UNI 2029	2330260000	C.21
SAI-SK-M12-UNI 2029	2330260000	C.22
SAI-SK-M12-UNI 2029	2330260000	C.25
SAI-SK-M12-UNI 2029	2330260000	C.26
SAI-SK-M12-UNI 2029	2330260000	C.27
SAI-SK-M12-UNI 2029	2330260000	C.28
SAI-SK-M12-UNI 2029	2330260000	C.29
SAI-SK-M12-UNI 2029	2330260000	C.30
SAISM-4/8S-M12-4P D-COD	1892120000	C.4
SAISM-4/8S-M12-4P D-COD	1892120000	C.5
SAISM-4/8S-M12-4P D-COD	1892120000	C.6
SAIS-M-5/8S M12 5P A-COD	1784740000	C.19
SAIS-M-5/8S M12 5P A-COD	1784740000	C.20
SAIS-M-5/8S M12 5P A-COD	1784740000	C.21
SAIS-M-5/8S M12 5P A-COD	1784740000	C.22
SCREWTY SET -DM	1920000000	C.33
SCREWTY SET -DM	1920000000	C.37
Screwty-M12-DM	1900001000	C.34
Screwty-M12-DM	1900001000	C.35
Screwty-M12-DM	1900001000	C.36
SD-CARD-8GB	2684400000	A.4
SD-CARD-8GB	2684400000	A.5
SD-CARD-8GB	2684400000	A.6
STRIPPER 6-16 RED-LINE	9203110000	C.34
STRIPPER 6-16 RED-LINE	9203110000	C.35
STRIPPER 6-16 RED-LINE	9203110000	C.36

T

THM UR20 GE	1429910000	A.4
THM UR20 GE	1429910000	A.5
THM UR20 GE	1429910000	A.6
THM UR20 GE	1429910000	B.100
THM UR20 GE	1429910000	B.101
THM UR20 GE	1429910000	B.102

Type	Order No.	Page
THM UR20 GE	1429910000	B.103
THM UR20 GE	1429910000	B.104
THM UR20 GE	1429910000	B.105
THM UR20 GE	1429910000	B.107
THM UR20 GE	1429910000	B.108
THM UR20 GE	1429910000	B.11
THM UR20 GE	1429910000	B.111
THM UR20 GE	1429910000	B.112
THM UR20 GE	1429910000	B.115
THM UR20 GE	1429910000	B.13
THM UR20 GE	1429910000	B.15
THM UR20 GE	1429910000	B.17
THM UR20 GE	1429910000	B.19
THM UR20 GE	1429910000	B.22
THM UR20 GE	1429910000	B.23
THM UR20 GE	1429910000	B.24
THM UR20 GE	1429910000	B.25
THM UR20 GE	1429910000	B.26
THM UR20 GE	1429910000	B.27
THM UR20 GE	1429910000	B.28
THM UR20 GE	1429910000	B.29
THM UR20 GE	1429910000	B.30
THM UR20 GE	1429910000	B.31
THM UR20 GE	1429910000	B.32
THM UR20 GE	1429910000	B.33
THM UR20 GE	1429910000	B.34
THM UR20 GE	1429910000	B.35
THM UR20 GE	1429910000	B.37
THM UR20 GE	1429910000	B.38
THM UR20 GE	1429910000	B.39
THM UR20 GE	1429910000	B.40
THM UR20 GE	1429910000	B.41
THM UR20 GE	1429910000	B.42
THM UR20 GE	1429910000	B.43
THM UR20 GE	1429910000	B.44
THM UR20 GE	1429910000	B.45
THM UR20 GE	1429910000	B.46
THM UR20 GE	1429910000	B.47
THM UR20 GE	1429910000	B.48
THM UR20 GE	1429910000	B.50
THM UR20 GE	1429910000	B.51
THM UR20 GE	1429910000	B.55
THM UR20 GE	1429910000	B.56
THM UR20 GE	1429910000	B.59
THM UR20 GE	1429910000	B.60
THM UR20 GE	1429910000	B.61
THM UR20 GE	1429910000	B.62
THM UR20 GE	1429910000	B.63
THM UR20 GE	1429910000	B.64
THM UR20 GE	1429910000	B.65
THM UR20 GE	1429910000	B.66
THM UR20 GE	1429910000	B.67
THM UR20 GE	1429910000	B.7
THM UR20 GE	1429910000	B.71
THM UR20 GE	1429910000	B.72
THM UR20 GE	1429910000	B.73
THM UR20 GE	1429910000	B.74
THM UR20 GE	1429910000	B.75
THM UR20 GE	1429910000	B.77
THM UR20 GE	1429910000	B.79
THM UR20 GE	1429910000	B.81
THM UR20 GE	1429910000	B.82
THM UR20 GE	1429910000	B.83
THM UR20 GE	1429910000	B.84
THM UR20 GE	1429910000	B.85
THM UR20 GE	1429910000	B.86
THM UR20 GE	1429910000	B.89
THM UR20 GE	1429910000	B.9
THM UR20 GE	1429910000	B.90
THM UR20 GE	1429910000	B.91
THM UR20 GE	1429910000	B.92
THM UR20 GE	1429910000	B.93
THM UR20 GE	1429910000	B.94
THM UR20 GE	1429910000	B.95
THM UR20 GE	1429910000	B.96
THM UR20 GE	1429910000	B.99
THM UR20 WS	1429420000	A.4
THM UR20 WS	1429420000	A.5
THM UR20 WS	1429420000	A.6
THM UR20 WS	1429420000	B.100
THM UR20 WS	1429420000	B.101
THM UR20 WS	1429420000	B.102
THM UR20 WS	1429420000	B.103
THM UR20 WS	1429420000	B.104
THM UR20 WS	1429420000	B.105
THM UR20 WS	1429420000	B.107
THM UR20 WS	1429420000	B.108
THM UR20 WS	1429420000	B.11
THM UR20 WS	1429420000	B.111
THM UR20 WS	1429420000	B.112
THM UR20 WS	1429420000	B.115
THM UR20 WS	1429420000	B.13
THM UR20 WS	1429420000	B.15
THM UR20 WS	1429420000	B.17
THM UR20 WS	1429420000	B.19
THM UR20 WS	1429420000	B.22
THM UR20 WS	1429420000	B.23
THM UR20 WS	1429420000	B.24
THM UR20 WS	1429420000	B.25

Type	Order No.	Page
THM UR20 WS	1429420000	B.26
THM UR20 WS	1429420000	B.27
THM UR20 WS	1429420000	B.28
THM UR20 WS	1429420000	B.29
THM UR20 WS	1429420000	B.30
THM UR20 WS	1429420000	B.31
THM UR20 WS	1429420000	B.32
THM UR20 WS	1429420000	B.33
THM UR20 WS	1429420000	B.34
THM UR20 WS	1429420000	B.35
THM UR20 WS	1429420000	B.37
THM UR20 WS	1429420000	B.38
THM UR20 WS	1429420000	B.39
THM UR20 WS	1429420000	B.40
THM UR20 WS	1429420000	B.41
THM UR20 WS	1429420000	B.42
THM UR20 WS	1429420000	B.43
THM UR20 WS	1429420000	B.44
THM UR20 WS	1429420000	B.45
THM UR20 WS	1429420000	B.46
THM UR20 WS	1429420000	B.47
THM UR20 WS	1429420000	B.48
THM UR20 WS	1429420000	B.50
THM UR20 WS	1429420000	B.51
THM UR20 WS	1429420000	B.55
THM UR20 WS	1429420000	B.56
THM UR20 WS	1429420000	B.59
THM UR20 WS	1429420000	B.60
THM UR20 WS	1429420000	B.61
THM UR20 WS	1429420000	B.62
THM UR20 WS	1429420000	B.63
THM UR20 WS	1429420000	B.64
THM UR20 WS	1429420000	B.65
THM UR20 WS	1429420000	B.66
THM UR20 WS	1429420000	B.67
THM UR20 WS	1429420000	B.7
THM UR20 WS	1429420000	B.71
THM UR20 WS	1429420000	B.72
THM UR20 WS	1429420000	B.73
THM UR20 WS	1429420000	B.74
THM UR20 WS	1429420000	B.75
THM UR20 WS	1429420000	B.77
THM UR20 WS	1429420000	B.79
THM UR20 WS	1429420000	B.81
THM UR20 WS	1429420000	B.82
THM UR20 WS	1429420000	B.83
THM UR20 WS	1429420000	B.84
THM UR20 WS	1429420000	B.85
THM UR20 WS	1429420000	B.86
THM UR20 WS	1429420000	B.89
THM UR20 WS	1429420000	B.9
THM UR20 WS	1429420000	B.90
THM UR20 WS	1429420000	B.91
THM UR20 WS	1429420000	B.92
THM UR20 WS	1429420000	B.93
THM UR20 WS	1429420000	B.94
THM UR20 WS	1429420000	B.95
THM UR20 WS	1429420000	B.96
THM UR20 WS	1429420000	B.99
TM-I 18 MC NE GE	1718431687	C.34
TM-I 18 MC NE GE	1718431687	C.35
TM-I 18 MC NE GE	1718431687	C.36
TM-I 18 MC NE WS	1718431044	C.34
TM-I 18 MC NE WS	1718431044	C.35
TM-I 18 MC NE WS	1718431044	C.36

U

UC20-SL2000-OLAC-EC	2638920000	A.4
UC20-WL2000-AC	1334950000	A.5
UC20-WL2000-IOT	1334990000	A.6
U-CREATE-PROCON-WEB-D-1000	2705660000	F.7
U-CREATE-PROCON-WEB-D-200	2705640000	F.7
U-CREATE-PROCON-WEB-D-2000	2705670000	F.7
U-CREATE-PROCON-WEB-D-500	2705650000	F.7
U-CREATE-PROCON-WEB-D-5000	2705680000	F.7
U-CREATE-PROCON-WEB-D-UC-100	2705820000	F.7
U-CREATE-PROCON-WEB-D-UC-2000	2705830000	F.7
U-CREATE-PROCON-WEB-D-UC-5000	2705840000	F.7
U-CREATE-PROCON-WEB-RT-1000	2705750000	F.7
U-CREATE-PROCON-WEB-RT-200	2705730000	F.7
U-CREATE-PROCON-WEB-RT-2000	2705760000	F.7
U-CREATE-PROCON-WEB-RT-500	2705740000	F.7
U-CREATE-PROCON-WEB-RT-5000	2705770000	F.7
U-CREATE-PROCON-WEB-RT-UC-2000	2708630000	F.7
U-CREATE-PROCON-WEB-RT-UC-5000	2708640000	F.7
U-CREATE-STUDIO	2660130000	A.4
U-CREATE-STUDIO	2660130000	F.2
UR20-16AUX-FE	1334790000	B.111
UR20-16AUX-FE	1334790000	B.113
UR20-16AUX-FE	1334790000	B.115
UR20-16AUX-GND-I	1334800000	B.111
UR20-16AUX-GND-I	1334800000	B.113
UR20-16AUX-GND-I	1334800000	B.115
UR20-16AUX-GND-O	1334810000	B.111
UR20-16AUX-GND-O	1334810000	B.113
UR20-16AUX-GND-O	1334810000	B.115
UR20-16AUX-I	1334770000	B.111
UR20-16AUX-I	1334770000	B.113
UR20-16AUX-I	1334770000	B.115
UR20-16AUX-O	1334780000	B.111
UR20-16AUX-O	1334780000	B.113
UR20-16AUX-O	1334780000	B.115
UR20-16DI-N	1315390000	B.113
UR20-16DI-N	1315390000	B.114
UR20-16DI-N	1315390000	B.32
UR20-16DI-N-PLC-INT	1315400000	B.113
UR20-16DI-N-PLC-INT	1315400000	B.114
UR20-16DI-N-PLC-INT	1315400000	B.33
UR20-16DI-P	1315200000	B.113
UR20-16DI-P	1315200000	B.114
UR20-16DI-P	1315200000	B.26
UR20-16DI-P-PLC-INT	1315210000	B.113
UR20-16DI-P-PLC-INT	1315210000	B.114
UR20-16DI-P-PLC-INT	1315210000	B.27
UR20-16DO-N	1315440000	B.113
UR20-16DO-N	1315440000	B.114
UR20-16DO-N	1315440000	B.47
UR20-16DO-N-PLC-INT	1315450000	B.113
UR20-16DO-N-PLC-INT	1315450000	B.114
UR20-16DO-N-PLC-INT	1315450000	B.48
UR20-16DO-P	1315250000	B.113
UR20-16DO-P	1315250000	B.114
UR20-16DO-P	1315250000	B.42
UR20-16DO-P-PLC-INT	1315270000	B.113
UR20-16DO-P-PLC-INT	1315270000	B.114
UR20-16DO-P-PLC-INT	1315270000	B.43
UR20-1CNT-100-1DO	1315570000	B.113
UR20-1CNT-100-1DO	1315570000	B.114
UR20-1CNT-100-1DO	1315570000	B.89
UR20-1CNT-500	1315580000	B.113
UR20-1CNT-500	1315580000	B.114
UR20-1CNT-500	1315580000	B.91
UR20-1COM-232-485-422	1315750000	B.113
UR20-1COM-232-485-422	1315750000	B.114
UR20-1COM-232-485-422	1315750000	B.94
UR20-1COM-SAI-PRO	2007430000	B.113
UR20-1COM-SAI-PRO	2007430000	B.114
UR20-1COM-SAI-PRO	2007430000	B.95
UR20-1SM-50W-6DI2DO-P	2489830000	B.113
UR20-1SM-50W-6DI2DO-P	2489830000	B.114
UR20-1SM-50W-6DI2DO-P	2489830000	B.57
UR20-1SSI	1508090000	B.113
UR20-1SSI	1508090000	B.114
UR20-1SSI	1508090000	B.93
UR20-2AI-SG-24-DIAG	1990070000	B.113
UR20-2AI-SG-24-DIAG	1990070000	B.114
UR20-2AI-SG-24-DIAG	1990070000	B.77
UR20-2CNT-100	1315590000	B.113
UR20-2CNT-100	1315590000	B.114
UR20-2CNT-100	1315590000	B.90
UR20-2DI-P-TS	1460140000	B.113
UR20-2DI-P-TS	1460140000	B.114
UR20-2DI-P-TS	1460140000	B.28
UR20-2FCNT-100	1508080000	B.113
UR20-2FCNT-100	1508080000	B.114
UR20-2FCNT-100	1508080000	B.92
UR20-2PWM-PN-0.5A	1315600000	B.113
UR20-2PWM-PN-0.5A	1315600000	B.114
UR20-2PWM-PN-0.5A	1315600000	B.55
UR20-2PWM-PN-2A	1315610000	B.113
UR20-2PWM-PN-2A	1315610000	B.114
UR20-2PWM-PN-2A	1315610000	B.56
UR20-3EM-230V-AC	2007420000	B.113
UR20-3EM-230V-AC	2007420000	B.114
UR20-3EM-230V-AC	2007420000	B.79
UR20-4AI-R-HS-16-DIAG	2001670000	B.113
UR20-4AI-R-HS-16-DIAG	2001670000	B.114
UR20-4AI-R-HS-16-DIAG	2001670000	B.75
UR20-4AI-RTD-DIAG	1315700000	B.113
UR20-4AI-RTD-DIAG	1315700000	B.114
UR20-4AI-RTD-DIAG	1315700000	B.71
UR20-4AI-RTD-HP-DIAG	2456540000	B.113
UR20-4AI-RTD-HP-DIAG	2456540000	B.114
UR20-4AI-RTD-HP-DIAG	2456540000	B.72
UR20-4AI-TC-DIAG	1315710000	B.113
UR20-4AI-TC-DIAG	1315710000	B.114
UR20-4AI-TC-DIAG	1315710000	B.74
UR20-4AI-UI-12	1394390000	B.113
UR20-4AI-UI-12	1394390000	B.114
UR20-4AI-UI-12	1394390000	B.59
UR20-4AI-UI-16	1315620000	B.113
UR20-4AI-UI-16	1315620000	B.114
UR20-4AI-UI-16	1315620000	B.60
UR20-4AI-UI-16-DIAG	1315690000	B.113
UR20-4AI-UI-16-DIAG	1315690000	B.114
UR20-4AI-UI-16-DIAG	1315690000	B.61
UR20-4AI-UI-16-DIAG-HD	1506910000	B.113
UR20-4AI-UI-16-DIAG-HD	1506910000	B.114
UR20-4AI-UI-16-DIAG-HD	1506910000	B.63
UR20-4AI-UI-16-HD	1506920000	B.113
UR20-4AI-UI-16-HD	1506920000	B.114
UR20-4AI-UI-16-HD	1506920000	B.62
UR20-4AI-UI-DIF-16-DIAG	1993880000	B.113
UR20-4AI-UI-DIF-16-DIAG	1993880000	B.114
UR20-4AI-UI-DIF-16-DIAG	1993880000	B.67
UR20-4AI-UI-DIF-32-DIAG	2544660000	B.68
UR20-4AO-UI-16	1315680000	B.113
UR20-4AO-UI-16	1315680000	B.114
UR20-4AO-UI-16	1315680000	B.81
UR20-4AO-UI-16-DIAG	1315730000	B.113
UR20-4AO-UI-16-DIAG	1315730000	B.114
UR20-4AO-UI-16-DIAG	1315730000	B.83
UR20-4AO-UI-16-DIAG-HD	1506930000	B.113
UR20-4AO-UI-16-DIAG-HD	1506930000	B.114
UR20-4AO-UI-16-DIAG-HD	1506930000	B.86
UR20-4AO-UI-16-HD	1510690000	B.113
UR20-4AO-UI-16-HD	1510690000	B.114
UR20-4AO-UI-16-HD	1510690000	B.85
UR20-4AO-UI-16-M	2453880000	B.113
UR20-4AO-UI-16-M	2453880000	B.114
UR20-4AO-UI-16-M	2453880000	B.82
UR20-4AO-UI-16-M-DIAG	2453870000	B.113
UR20-4AO-UI-16-M-DIAG	2453870000	B.114
UR20-4AO-UI-16-M-DIAG	2453870000	B.84
UR20-4COM-IO-LINK	1315740000	B.113
UR20-4COM-IO-LINK	1315740000	B.114
UR20-4COM-IO-LINK	1315740000	B.96
UR20-4DI-2W-230V-AC	1550070000	B.113
UR20-4DI-2W-230V-AC	1550070000	B.114
UR20-4DI-2W-230V-AC	1550070000	B.35
UR20-4DI-4DO-PN-FSOE-V2	2464580000	B.113
UR20-4DI-4DO-PN-FSOE-V2	2464580000	B.114
UR20-4DI-4DO-PN-FSOE-V2	2464580000	B.99
UR20-4DI-4DO-PN-FSPS-V2	2464570000	B.101
UR20-4DI-4DO-PN-FSPS-V2	2464570000	B.113
UR20-4DI-4DO-PN-FSPS-V2	2464570000	B.114
UR20-4DI-N	1315350000	B.113
UR20-4DI-N	1315350000	B.114
UR20-4DI-N	1315350000	B.30
UR20-4DI-P	1315170000	B.113
UR20-4DI-P	1315170000	B.114
UR20-4DI-P	1315170000	B.21
UR20-4DI-P-3W	2009360000	B.113
UR20-4DI-P-3W	2009360000	B.114
UR20-4DI-P-3W	2009360000	B.22
UR20-4DI-P-TS	1460150000	B.113
UR20-4DI-P-TS	1460150000	B.114
UR20-4DI-P-TS	1460150000	B.29
UR20-4DO-ISO-4A	2457250000	B.113
UR20-4DO-ISO-4A	2457250000	B.114
UR20-4DO-ISO-4A	2457250000	B.49
UR20-4DO-N	1315410000	B.113
UR20-4DO-N	1315410000	B.114
UR20-4DO-N	1315410000	B.44
UR20-4DO-N-2A	1315420000	B.113
UR20-4DO-N-2A	1315420000	B.114
UR20-4DO-N-2A	1315420000	B.45
UR20-4DO-P	1315220000	B.113
UR20-4DO-P	1315220000	B.114
UR20-4DO-P	1315220000	B.37
UR20-4DO-P-2A	1315230000	B.113
UR20-4DO-P-2A	1315230000	B.114
UR20-4DO-P-2A	1315230000	B.38
UR20-4DO-PN-2A	1394420000	B.113
UR20-4DO-PN-2A	1394420000	B.114
UR20-4DO-PN-2A	1394420000	B.39
UR20-4RO-CO-255	1315550000	B.113
UR20-4RO-CO-255	1315550000	B.114
UR20-4RO-CO-255	1315550000	B.51
UR20-4RO-SSR-255	1315540000	B.113
UR20-4RO-SSR-255	1315540000	B.114
UR20-4RO-SSR-255	1315540000	B.50
UR20-8AI-I-16-DIAG-HD	1315720000	B.113
UR20-8AI-I-16-DIAG-HD	1315720000	B.114
UR20-8AI-I-16-DIAG-HD	1315720000	B.65
UR20-8AI-I-16-HD	1315650000	B.113
UR20-8AI-I-16-HD	1315650000	B.114
UR20-8AI-I-16-HD	1315650000	B.64
UR20-8AI-I-PLC-INT	1315670000	B.113
UR20-8AI-I-PLC-INT	1315670000	B.114
UR20-8AI-I-PLC-INT	1315670000	B.66
UR20-8AI-RTD-DIAG-2W	2555940000	B.113
UR20-8AI-RTD-DIAG-2W	2555940000	B.114
UR20-8AI-RTD-DIAG-2W	2555940000	B.73
UR20-8DI-ISO-2W	2457240000	B.113
UR20-8DI-ISO-2W	2457240000	B.114
UR20-8DI-ISO-2W	2457240000	B.34
UR20-8DI-N-3W	1315370000	B.113
UR20-8DI-N-3W	1315370000	B.114
UR20-8DI-N-3W	1315370000	B.31
UR20-8DIO-P-3W-DIAG	2456530000	B.113
UR20-8DIO-P-3W-DIAG	2456530000	B.114
UR20-8DIO-P-3W-DIAG	2456530000	B.53
UR20-8DI-P-2W	1315180000	B.113
UR20-8DI-P-2W	1315180000	B.114
UR20-8DI-P-2W	1315180000	B.23
UR20-8DI-P-3W	1394400000	B.113
UR20-8DI-P-3W	1394400000	B.114
UR20-8DI-P-3W	1394400000	B.24
UR20-8DI-P-3W-HD	1315190000	B.113
UR20-8DI-P-3W-HD	1315190000	B.114
UR20-8DI-P-3W-HD	1315190000	B.25
UR20-8DI-PN-FSOE-V2	2464600000	B.100
UR20-8DI-PN-FSOE-V2	2464600000	B.113
UR20-8DI-PN-FSOE-V2	2464600000	B.114
UR20-8DI-PN-FSPS-V2	2464590000	B.102

Type	Order No.	Page
UR20-8DI-PN-FSPS-V2	2464590000	B.113
UR20-8DI-PN-FSPS-V2	2464590000	B.114
UR20-8DO-N	1315430000	B.113
UR20-8DO-N	1315430000	B.114
UR20-8DO-N	1315430000	B.46
UR20-8DO-P	1315240000	B.113
UR20-8DO-P	1315240000	B.114
UR20-8DO-P	1315240000	B.40
UR20-8DO-P-2W-HD	1509830000	B.113
UR20-8DO-P-2W-HD	1509830000	B.114
UR20-8DO-P-2W-HD	1509830000	B.41
UR20-BM-PF-I-SP	1350940000	B.107
UR20-BM-PF-I-SP	1350940000	B.113
UR20-BM-PF-O-SIL-SP	1350970000	B.103
UR20-BM-PF-O-SIL-SP	1350970000	B.104
UR20-BM-PF-O-SIL-SP	1350970000	B.105
UR20-BM-PF-O-SIL-SP	1350970000	B.113
UR20-BM-PF-O-SP	1350950000	B.108
UR20-BM-PF-O-SP	1350950000	B.113
UR20-BM-SP	1350930000	B.100
UR20-BM-SP	1350930000	B.101
UR20-BM-SP	1350930000	B.102
UR20-BM-SP	1350930000	B.111
UR20-BM-SP	1350930000	B.112
UR20-BM-SP	1350930000	B.113
UR20-BM-SP	1350930000	B.21
UR20-BM-SP	1350930000	B.22
UR20-BM-SP	1350930000	B.23
UR20-BM-SP	1350930000	B.24
UR20-BM-SP	1350930000	B.25
UR20-BM-SP	1350930000	B.26
UR20-BM-SP	1350930000	B.27
UR20-BM-SP	1350930000	B.28
UR20-BM-SP	1350930000	B.29
UR20-BM-SP	1350930000	B.30
UR20-BM-SP	1350930000	B.31
UR20-BM-SP	1350930000	B.32
UR20-BM-SP	1350930000	B.33
UR20-BM-SP	1350930000	B.34
UR20-BM-SP	1350930000	B.35
UR20-BM-SP	1350930000	B.37
UR20-BM-SP	1350930000	B.38
UR20-BM-SP	1350930000	B.39
UR20-BM-SP	1350930000	B.40
UR20-BM-SP	1350930000	B.41
UR20-BM-SP	1350930000	B.42
UR20-BM-SP	1350930000	B.43
UR20-BM-SP	1350930000	B.44
UR20-BM-SP	1350930000	B.45
UR20-BM-SP	1350930000	B.46
UR20-BM-SP	1350930000	B.47
UR20-BM-SP	1350930000	B.48
UR20-BM-SP	1350930000	B.49
UR20-BM-SP	1350930000	B.50
UR20-BM-SP	1350930000	B.51
UR20-BM-SP	1350930000	B.53
UR20-BM-SP	1350930000	B.55
UR20-BM-SP	1350930000	B.56
UR20-BM-SP	1350930000	B.57
UR20-BM-SP	1350930000	B.59
UR20-BM-SP	1350930000	B.60
UR20-BM-SP	1350930000	B.61
UR20-BM-SP	1350930000	B.63
UR20-BM-SP	1350930000	B.64
UR20-BM-SP	1350930000	B.65
UR20-BM-SP	1350930000	B.66
UR20-BM-SP	1350930000	B.67
UR20-BM-SP	1350930000	B.68
UR20-BM-SP	1350930000	B.7
UR20-BM-SP	1350930000	B.71
UR20-BM-SP	1350930000	B.72
UR20-BM-SP	1350930000	B.73
UR20-BM-SP	1350930000	B.74
UR20-BM-SP	1350930000	B.75
UR20-BM-SP	1350930000	B.77
UR20-BM-SP	1350930000	B.79
UR20-BM-SP	1350930000	B.81
UR20-BM-SP	1350930000	B.82
UR20-BM-SP	1350930000	B.83
UR20-BM-SP	1350930000	B.84
UR20-BM-SP	1350930000	B.85
UR20-BM-SP	1350930000	B.86
UR20-BM-SP	1350930000	B.89
UR20-BM-SP	1350930000	B.90
UR20-BM-SP	1350930000	B.91
UR20-BM-SP	1350930000	B.92
UR20-BM-SP	1350930000	B.93
UR20-BM-SP	1350930000	B.94
UR20-BM-SP	1350930000	B.95
UR20-BM-SP	1350930000	B.96
UR20-BM-SP	1350930000	B.99
UR20-EBK-ACC	1346610000	A.4
UR20-EBK-ACC	1346610000	A.5
UR20-EBK-ACC	1346610000	A.6
UR20-EBK-ACC	1346610000	B.100
UR20-EBK-ACC	1346610000	B.101
UR20-EBK-ACC	1346610000	B.102
UR20-EBK-ACC	1346610000	B.103
UR20-EBK-ACC	1346610000	B.104

Type	Order No.	Page
UR20-EBK-ACC	1346610000	B.105
UR20-EBK-ACC	1346610000	B.107
UR20-EBK-ACC	1346610000	B.108
UR20-EBK-ACC	1346610000	B.11
UR20-EBK-ACC	1346610000	B.111
UR20-EBK-ACC	1346610000	B.112
UR20-EBK-ACC	1346610000	B.115
UR20-EBK-ACC	1346610000	B.13
UR20-EBK-ACC	1346610000	B.15
UR20-EBK-ACC	1346610000	B.17
UR20-EBK-ACC	1346610000	B.19
UR20-EBK-ACC	1346610000	B.21
UR20-EBK-ACC	1346610000	B.22
UR20-EBK-ACC	1346610000	B.23
UR20-EBK-ACC	1346610000	B.24
UR20-EBK-ACC	1346610000	B.25
UR20-EBK-ACC	1346610000	B.26
UR20-EBK-ACC	1346610000	B.27
UR20-EBK-ACC	1346610000	B.28
UR20-EBK-ACC	1346610000	B.29
UR20-EBK-ACC	1346610000	B.30
UR20-EBK-ACC	1346610000	B.31
UR20-EBK-ACC	1346610000	B.32
UR20-EBK-ACC	1346610000	B.33
UR20-EBK-ACC	1346610000	B.34
UR20-EBK-ACC	1346610000	B.35
UR20-EBK-ACC	1346610000	B.37
UR20-EBK-ACC	1346610000	B.38
UR20-EBK-ACC	1346610000	B.39
UR20-EBK-ACC	1346610000	B.40
UR20-EBK-ACC	1346610000	B.41
UR20-EBK-ACC	1346610000	B.42
UR20-EBK-ACC	1346610000	B.43
UR20-EBK-ACC	1346610000	B.44
UR20-EBK-ACC	1346610000	B.45
UR20-EBK-ACC	1346610000	B.46
UR20-EBK-ACC	1346610000	B.47
UR20-EBK-ACC	1346610000	B.48
UR20-EBK-ACC	1346610000	B.49
UR20-EBK-ACC	1346610000	B.5
UR20-EBK-ACC	1346610000	B.50
UR20-EBK-ACC	1346610000	B.51
UR20-EBK-ACC	1346610000	B.53
UR20-EBK-ACC	1346610000	B.55
UR20-EBK-ACC	1346610000	B.56
UR20-EBK-ACC	1346610000	B.57
UR20-EBK-ACC	1346610000	B.59
UR20-EBK-ACC	1346610000	B.60
UR20-EBK-ACC	1346610000	B.61
UR20-EBK-ACC	1346610000	B.62
UR20-EBK-ACC	1346610000	B.63
UR20-EBK-ACC	1346610000	B.64
UR20-EBK-ACC	1346610000	B.65
UR20-EBK-ACC	1346610000	B.66
UR20-EBK-ACC	1346610000	B.67
UR20-EBK-ACC	1346610000	B.68
UR20-EBK-ACC	1346610000	B.7
UR20-EBK-ACC	1346610000	B.71
UR20-EBK-ACC	1346610000	B.72
UR20-EBK-ACC	1346610000	B.73
UR20-EBK-ACC	1346610000	B.74
UR20-EBK-ACC	1346610000	B.75
UR20-EBK-ACC	1346610000	B.77
UR20-EBK-ACC	1346610000	B.79
UR20-EBK-ACC	1346610000	B.81
UR20-EBK-ACC	1346610000	B.82
UR20-EBK-ACC	1346610000	B.83
UR20-EBK-ACC	1346610000	B.84
UR20-EBK-ACC	1346610000	B.85
UR20-EBK-ACC	1346610000	B.86
UR20-EBK-ACC	1346610000	B.89
UR20-EBK-ACC	1346610000	B.9
UR20-EBK-ACC	1346610000	B.90
UR20-EBK-ACC	1346610000	B.91
UR20-EBK-ACC	1346610000	B.92
UR20-EBK-ACC	1346610000	B.93
UR20-EBK-ACC	1346610000	B.94
UR20-EBK-ACC	1346610000	B.95
UR20-EBK-ACC	1346610000	B.96
UR20-EBK-ACC	1346610000	B.99
UR20-EM-1315170000-SP	1346640000	B.113
UR20-EM-1315170000-SP	1346640000	B.21
UR20-EM-1315180000-SP	1490220000	B.113
UR20-EM-1315180000-SP	1490220000	B.23
UR20-EM-1315190000-SP	1346670000	B.113
UR20-EM-1315190000-SP	1346670000	B.25
UR20-EM-1315200000-SP	1346680000	B.113
UR20-EM-1315200000-SP	1346680000	B.26
UR20-EM-1315210000-SP	1346690000	B.113
UR20-EM-1315210000-SP	1346690000	B.27
UR20-EM-1315220000-SP	1346700000	B.113
UR20-EM-1315220000-SP	1346700000	B.37
UR20-EM-1315230000-SP	1346710000	B.113
UR20-EM-1315230000-SP	1346710000	B.38
UR20-EM-1315240000-SP	1346720000	B.113
UR20-EM-1315240000-SP	1346720000	B.40
UR20-EM-1315250000-SP	1346730000	B.113
UR20-EM-1315250000-SP	1346730000	B.42
UR20-EM-1315270000-SP	1346740000	B.113

Type	Order No.	Page
UR20-EM-1315270000-SP	1346740000	B.43
UR20-EM-1315350000-SP	1346870000	B.113
UR20-EM-1315350000-SP	1346870000	B.30
UR20-EM-1315370000-SP	1346880000	B.113
UR20-EM-1315370000-SP	1346880000	B.31
UR20-EM-1315390000-SP	1346920000	B.113
UR20-EM-1315390000-SP	1346920000	B.32
UR20-EM-1315400000-SP	1346930000	B.113
UR20-EM-1315400000-SP	1346930000	B.33
UR20-EM-1315410000-SP	1346940000	B.113
UR20-EM-1315410000-SP	1346940000	B.44
UR20-EM-1315420000-SP	1346950000	B.113
UR20-EM-1315420000-SP	1346950000	B.45
UR20-EM-1315430000-SP	1346970000	B.113
UR20-EM-1315430000-SP	1346970000	B.46
UR20-EM-1315440000-SP	1346980000	B.113
UR20-EM-1315440000-SP	1346980000	B.47
UR20-EM-1315450000-SP	1346990000	B.113
UR20-EM-1315450000-SP	1346990000	B.48
UR20-EM-1315540000-SP	1347120000	B.113
UR20-EM-1315540000-SP	1347120000	B.50
UR20-EM-1315550000-SP	1347130000	B.113
UR20-EM-1315550000-SP	1347130000	B.51
UR20-EM-1315570000-SP	1347140000	B.113
UR20-EM-1315570000-SP	1347140000	B.89
UR20-EM-1315580000-SP	1347170000	B.113
UR20-EM-1315580000-SP	1347170000	B.91
UR20-EM-1315590000-SP	1347150000	B.113
UR20-EM-1315590000-SP	1347150000	B.90
UR20-EM-1315600000-SP	1347180000	B.113
UR20-EM-1315600000-SP	1347180000	B.55
UR20-EM-1315610000-SP	1347190000	B.113
UR20-EM-1315610000-SP	1347190000	B.56
UR20-EM-1315620000-SP	1347200000	B.113
UR20-EM-1315620000-SP	1347200000	B.60
UR20-EM-1315650000-SP	1347240000	B.113
UR20-EM-1315650000-SP	1347240000	B.64
UR20-EM-1315670000-SP	1347250000	B.113
UR20-EM-1315670000-SP	1347250000	B.66
UR20-EM-1315680000-SP	1347270000	B.113
UR20-EM-1315680000-SP	1347270000	B.81
UR20-EM-1315690000-SP	1347280000	B.113
UR20-EM-1315690000-SP	1347280000	B.61
UR20-EM-1315700000-SP	1347290000	B.113
UR20-EM-1315700000-SP	1347290000	B.71
UR20-EM-1315710000-SP	1435740000	B.113
UR20-EM-1315710000-SP	1435740000	B.74
UR20-EM-1315720000-SP	1347320000	B.113
UR20-EM-1315720000-SP	1347320000	B.65
UR20-EM-1315730000-SP	1347330000	B.113
UR20-EM-1315730000-SP	1347330000	B.83
UR20-EM-1315740000-SP	1347340000	B.113
UR20-EM-1315740000-SP	1347340000	B.96
UR20-EM-1315750000-SP	1347350000	B.113
UR20-EM-1315750000-SP	1347350000	B.94
UR20-EM-1315770000-SP	1347370000	B.112
UR20-EM-1315770000-SP	1347370000	B.113
UR20-EM-1334710000-SP	1347380000	B.107
UR20-EM-1334710000-SP	1347380000	B.113
UR20-EM-1334740000-SP	1347420000	B.108
UR20-EM-1334740000-SP	1347420000	B.113
UR20-EM-1334770000-SP	1347450000	B.111
UR20-EM-1334770000-SP	1347450000	B.113
UR20-EM-1334780000-SP	1347470000	B.111
UR20-EM-1334780000-SP	1347470000	B.113
UR20-EM-1334790000-SP	1347480000	B.111
UR20-EM-1334790000-SP	1347480000	B.113
UR20-EM-1334800000-SP	1347490000	B.111
UR20-EM-1334800000-SP	1347490000	B.113
UR20-EM-1334810000-SP	1347500000	B.111
UR20-EM-1334810000-SP	1347500000	B.113
UR20-EM-1335030000-SP	1347520000	B.103
UR20-EM-1335030000-SP	1347520000	B.113
UR20-EM-1335040000-SP	1347530000	B.105
UR20-EM-1335040000-SP	1347530000	B.113
UR20-EM-1335050000-SP	1347540000	B.104
UR20-EM-1335050000-SP	1347540000	B.113
UR20-EM-1335060000-SP	1347550000	B.113
UR20-EM-1335070000-SP	1347570000	B.113
UR20-EM-1394390000-SP	1434230000	B.113
UR20-EM-1394390000-SP	1434230000	B.59
UR20-EM-1394400000-SP	1434220000	B.113
UR20-EM-1394400000-SP	1346650000	B.24
UR20-EM-1394420000-SP	1480950000	B.113
UR20-EM-1394420000-SP	1480950000	B.39
UR20-EM-1460140000-SP	1463690000	B.113
UR20-EM-1460140000-SP	1463690000	B.28
UR20-EM-1460150000-SP	1463680000	B.113
UR20-EM-1460150000-SP	1463680000	B.29
UR20-EM-1506910000-SP	1515430000	B.113
UR20-EM-1506910000-SP	1515430000	B.63
UR20-EM-1506920000-SP	1515420000	B.113
UR20-EM-1506920000-SP	1515420000	B.62
UR20-EM-1506930000-SP	1515480000	B.113
UR20-EM-1506930000-SP	1515480000	B.86
UR20-EM-1508080000-SP	1515440000	B.113
UR20-EM-1508080000-SP	1515440000	B.92
UR20-EM-1508090000-SP	1515490000	B.113
UR20-EM-1508090000-SP	1515490000	B.93

Type	Order No.	Page
UR20-EM-1509830000-SP	1515450000	B.113
UR20-EM-1509830000-SP	1515450000	B.41
UR20-EM-1510690000-SP	1515470000	B.113
UR20-EM-1510690000-SP	1515470000	B.85
UR20-EM-1529780000-SP	1993030000	B.113
UR20-EM-1529800000-SP	1993040000	B.113
UR20-EM-1550070000-SP	1558880000	B.113
UR20-EM-1550070000-SP	1558880000	B.35
UR20-EM-1990070000-SP	1562260000	B.113
UR20-EM-1990070000-SP	1562260000	B.77
UR20-EM-1993880000-SP	2446190000	B.113
UR20-EM-1993880000-SP	2446190000	B.67
UR20-EM-2001670000-SP	2068640000	B.113
UR20-EM-2001670000-SP	2068640000	B.75
UR20-EM-2007420000-SP	1562270000	B.113
UR20-EM-2007420000-SP	1562270000	B.79
UR20-EM-200743000-SP	2425350000	B.113
UR20-EM-200743000-SP	2425350000	B.95
UR20-EM-2009360000-SP	2011260000	B.113
UR20-EM-2009360000-SP	2011260000	B.22
UR20-EM-2453870000-SP	2508800000	B.113
UR20-EM-2453870000-SP	2508800000	B.84
UR20-EM-2453880000-SP	2508790000	B.113
UR20-EM-2453880000-SP	2508790000	B.82
UR20-EM-2456530000-SP	2593330000	B.113
UR20-EM-2456530000-SP	2593330000	B.53
UR20-EM-2456540000-SP	2545620000	B.113
UR20-EM-2456540000-SP	2545620000	B.72
UR20-EM-2457240000-SP	2545780000	B.113
UR20-EM-2457240000-SP	2545780000	B.34
UR20-EM-2457250000-SP	2545790000	B.113
UR20-EM-2457250000-SP	2545790000	B.49
UR20-EM-2464570000-SP	2466030000	B.101
UR20-EM-2464570000-SP	2466030000	B.113
UR20-EM-2464580000-SP	2466020000	B.113
UR20-EM-2464580000-SP	2466020000	B.99
UR20-EM-2464590000-SP	2466010000	B.102
UR20-EM-2464590000-SP	2466010000	B.113
UR20-EM-2464600000-SP	2465960000	B.100
UR20-EM-2464600000-SP	2465960000	B.113
UR20-EM-2489830000-SP	2585660000	B.113
UR20-EM-2489830000-SP	2585660000	B.57
UR20-EM-2544660000-SP	2550610000	B.68
UR20-EM-2555940000-SP	2593310000	B.113
UR20-EM-2555940000-SP	2593310000	B.73
UR20-ES	1315770000	B.112
UR20-ES	1315770000	B.113
UR20-ES	1315770000	B.115
UR20-FBC-CAN	1334890000	B.113
UR20-FBC-CAN	1334890000	B.114
UR20-FBC-CAN	1334890000	B.17
UR20-FBC-DN	1334900000	B.113
UR20-FBC-DN	1334900000	B.114
UR20-FBC-DN	1334900000	B.15
UR20-FBC-EC	1334910000	B.113
UR20-FBC-EC	1334910000	B.114
UR20-FBC-EC	1334910000	B.9
UR20-FBC-EIP	1334920000	B.113
UR20-FBC-EIP	1334920000	B.114
UR20-FBC-EIP	1334920000	B.13
UR20-FBC-MOD-TCP-V2	2476450000	B.11
UR20-FBC-MOD-TCP-V2	2476450000	B.113
UR20-FBC-MOD-TCP-V2	2476450000	B.114
UR20-FBC-PB-DP-V2	2614380000	B.113
UR20-FBC-PB-DP-V2	2614380000	B.114
UR20-FBC-PB-DP-V2	2614380000	B.5
UR20-FBC-PL	1334940000	B.113
UR20-FBC-PL	1334940000	B.114
UR20-FBC-PL	1334940000	B.19
UR20-FBC-PN-IRT-V2	2566380000	B.113
UR20-FBC-PN-IRT-V2	2566380000	B.114
UR20-FBC-PN-IRT-V2	2566380000	B.7
UR20-PF-I	1334710000	B.107
UR20-PF-I	1334710000	B.113
UR20-PF-I	1334710000	B.115
UR20-PF-O	1334740000	B.108
UR20-PF-O	1334740000	B.113
UR20-PF-O	1334740000	B.115
UR20-PF-O-1DI-SIL	1335030000	B.103
UR20-PF-O-1DI-SIL	1335030000	B.113
UR20-PF-O-1DI-SIL	1335030000	B.115
UR20-PF-O-2DI-DELAY-SIL	1335040000	B.105
UR20-PF-O-2DI-DELAY-SIL	1335040000	B.113
UR20-PF-O-2DI-DELAY-SIL	1335040000	B.115
UR20-PF-O-2DI-SIL	1335050000	B.104
UR20-PF-O-2DI-SIL	1335050000	B.113
UR20-PF-O-2DI-SIL	1335050000	B.115
UR20-PG0.35	1469340000	B.25
UR20-PG0.35	1469340000	B.41
UR20-PG0.35	1469340000	B.62
UR20-PG0.35	1469340000	B.63
UR20-PG0.35	1469340000	B.64
UR20-PG0.35	1469340000	B.65
UR20-PG0.35	1469340000	B.85
UR20-PG0.35	1469340000	B.86
UR20-PK1-2489830000-SP	2573750000	B.113
UR20-PK1-2489830000-SP	2573750000	B.57
UR20-PK-1315170000-SP	1346440000	B.113
UR20-PK-1315170000-SP	1346440000	B.21

Type	Order No.	Page
UR20-PK-1315180000-SP	1346430000	B.113
UR20-PK-1315180000-SP	1346430000	B.23
UR20-PK-1315190000-SP	1518800000	B.113
UR20-PK-1315190000-SP	1518800000	B.25
UR20-PK-1315200000-SP	1346400000	B.113
UR20-PK-1315200000-SP	1346400000	B.26
UR20-PK-1315210000-SP	1346590000	B.113
UR20-PK-1315210000-SP	1346590000	B.27
UR20-PK-1315220000-SP	1483960000	B.113
UR20-PK-1315220000-SP	1483960000	B.37
UR20-PK-1315230000-SP	1483970000	B.113
UR20-PK-1315230000-SP	1483970000	B.38
UR20-PK-1315240000-SP	1346410000	B.113
UR20-PK-1315240000-SP	1346410000	B.40
UR20-PK-1315250000-SP	1483990000	B.113
UR20-PK-1315250000-SP	1483990000	B.42
UR20-PK-1315270000-SP	1483940000	B.113
UR20-PK-1315270000-SP	1483940000	B.43
UR20-PK-1315350000-SP	1559770000	B.113
UR20-PK-1315350000-SP	1559770000	B.30
UR20-PK-1315370000-SP	1559780000	B.113
UR20-PK-1315370000-SP	1559780000	B.31
UR20-PK-1315390000-SP	1559790000	B.113
UR20-PK-1315390000-SP	1559790000	B.32
UR20-PK-1315400000-SP	1559800000	B.113
UR20-PK-1315400000-SP	1559800000	B.33
UR20-PK-1315410000-SP	1559840000	B.113
UR20-PK-1315410000-SP	1559840000	B.44
UR20-PK-1315420000-SP	1559850000	B.113
UR20-PK-1315420000-SP	1559850000	B.45
UR20-PK-1315430000-SP	1984770000	B.113
UR20-PK-1315430000-SP	1984770000	B.46
UR20-PK-1315440000-SP	2000520000	B.113
UR20-PK-1315440000-SP	2000520000	B.47
UR20-PK-1315450000-SP	2000540000	B.113
UR20-PK-1315450000-SP	2000540000	B.48
UR20-PK-1315540000-SP	1484000000	B.113
UR20-PK-1315540000-SP	1484000000	B.50
UR20-PK-1315550000-SP	1346500000	B.113
UR20-PK-1315550000-SP	1346500000	B.51
UR20-PK-1315570000-SP	1346520000	B.113
UR20-PK-1315570000-SP	1346520000	B.89
UR20-PK-1315580000-SP	1346530000	B.113
UR20-PK-1315580000-SP	1346530000	B.91
UR20-PK-1315590000-SP	1346540000	B.113
UR20-PK-1315590000-SP	1346540000	B.90
UR20-PK-1315600000-SP	1484010000	B.113
UR20-PK-1315600000-SP	1484010000	B.55
UR20-PK-1315610000-SP	1346550000	B.113
UR20-PK-1315610000-SP	1346550000	B.56
UR20-PK-1315620000-SP	1484020000	B.113
UR20-PK-1315620000-SP	1484020000	B.60
UR20-PK-1315650000-SP	1559740000	B.113
UR20-PK-1315650000-SP	1559740000	B.64
UR20-PK-1315670000-SP	1483950000	B.113
UR20-PK-1315670000-SP	1483950000	B.66
UR20-PK-1315680000-SP	1484070000	B.113
UR20-PK-1315680000-SP	1484070000	B.81
UR20-PK-1315690000-SP	1518870000	B.113
UR20-PK-1315690000-SP	1518870000	B.61
UR20-PK-1315700000-SP	1484040000	B.113
UR20-PK-1315700000-SP	1484040000	B.71
UR20-PK-1315710000-SP	1484050000	B.113
UR20-PK-1315710000-SP	1484050000	B.74
UR20-PK-1315720000-SP	1559750000	B.113
UR20-PK-1315720000-SP	1559750000	B.65
UR20-PK-1315730000-SP	1518880000	B.113
UR20-PK-1315730000-SP	1518880000	B.83
UR20-PK-1315740000-SP	2508760000	B.113
UR20-PK-1315740000-SP	2508760000	B.96
UR20-PK-1315750000-SP	2425150000	B.113
UR20-PK-1315750000-SP	2425150000	B.94
UR20-PK-1315770000-SP	1346510000	B.112
UR20-PK-1315770000-SP	1346510000	B.113
UR20-PK-1334710000-SP	1346460000	B.107
UR20-PK-1334710000-SP	1346460000	B.113
UR20-PK-1334740000-SP	1346480000	B.108
UR20-PK-1334740000-SP	1346480000	B.113
UR20-PK-1334770000-SP	1346450000	B.111
UR20-PK-1334770000-SP	1346450000	B.113
UR20-PK-1334780000-SP	1484080000	B.111
UR20-PK-1334780000-SP	1484080000	B.113
UR20-PK-1334790000-SP	1346490000	B.111
UR20-PK-1334790000-SP	1346490000	B.113
UR20-PK-1334800000-SP	1346470000	B.111
UR20-PK-1334800000-SP	1346470000	B.113
UR20-PK-1334810000-SP	1484090000	B.111
UR20-PK-1334810000-SP	1484090000	B.113
UR20-PK-1334890000-SP	2003530000	B.113
UR20-PK-1334890000-SP	2003530000	B.17
UR20-PK-1334900000-SP	2003540000	B.113
UR20-PK-1334900000-SP	2003540000	B.15
UR20-PK-1334910000-SP	1484440000	B.113
UR20-PK-1334910000-SP	1484440000	B.9
UR20-PK-1334920000-SP	1541290000	B.113
UR20-PK-1334920000-SP	1541290000	B.13
UR20-PK-1334940000-SP	2425170000	B.113
UR20-PK-1334940000-SP	2425170000	B.19
UR20-PK-1334950000-SP	2605360000	A.5

Type	Order No.	Page
UR20-PK-1334990000-SP	2605350000	A.6
UR20-PK-1335030000-SP	1346560000	B.103
UR20-PK-1335030000-SP	1346560000	B.113
UR20-PK-1335040000-SP	1484100000	B.105
UR20-PK-1335040000-SP	1484100000	B.113
UR20-PK-1335050000-SP	1346570000	B.104
UR20-PK-1335050000-SP	1346570000	B.113
UR20-PK-1335060000-SP	1992940000	B.113
UR20-PK-1335070000-SP	1992950000	B.113
UR20-PK-1394390000-SP	1484030000	B.113
UR20-PK-1394390000-SP	1484030000	B.59
UR20-PK-1394400000-SP	1411430000	B.113
UR20-PK-1394400000-SP	1411430000	B.24
UR20-PK-1394420000-SP	1483980000	B.113
UR20-PK-1394420000-SP	1483980000	B.39
UR20-PK-1460140000-SP	1484110000	B.113
UR20-PK-1460140000-SP	1484110000	B.28
UR20-PK-1460150000-SP	1484430000	B.113
UR20-PK-1460150000-SP	1484430000	B.29
UR20-PK-1506910000-SP	1518820000	B.113
UR20-PK-1506910000-SP	1518820000	B.63
UR20-PK-1506920000-SP	1518830000	B.113
UR20-PK-1506920000-SP	1518830000	B.62
UR20-PK-1506930000-SP	1531810000	B.113
UR20-PK-1506930000-SP	1531810000	B.86
UR20-PK-1508080000-SP	1518840000	B.113
UR20-PK-1508080000-SP	1518840000	B.92
UR20-PK-1508090000-SP	1559870000	B.113
UR20-PK-1508090000-SP	1559870000	B.93
UR20-PK-1509830000-SP	1559720000	B.113
UR20-PK-1509830000-SP	1559720000	B.41
UR20-PK-1510690000-SP	1531830000	B.113
UR20-PK-1510690000-SP	1531830000	B.85
UR20-PK-1529780000-SP	1992960000	B.113
UR20-PK-1529800000-SP	1992970000	B.113
UR20-PK-1550070000-SP	1559820000	B.113
UR20-PK-1550070000-SP	1559820000	B.35
UR20-PK-1990070000-SP	2068620000	B.113
UR20-PK-1990070000-SP	2068620000	B.77
UR20-PK-1993880000-SP	2446200000	B.113
UR20-PK-1993880000-SP	2446200000	B.67
UR20-PK-2001670000-SP	2068610000	B.113
UR20-PK-2001670000-SP	2068610000	B.75
UR20-PK-2007420000-SP	2068630000	B.113
UR20-PK-2007420000-SP	2068630000	B.79
UR20-PK-2007430000-SP	2425160000	B.113
UR20-PK-2007430000-SP	2425160000	B.95
UR20-PK-2009360000-SP	2011240000	B.113
UR20-PK-2009360000-SP	2011240000	B.22
UR20-PK2-2489830000-SP	2585650000	B.113
UR20-PK2-2489830000-SP	2585650000	B.57
UR20-PK-2453870000-SP	2508780000	B.113
UR20-PK-2453870000-SP	2508780000	B.84
UR20-PK-2453880000-SP	2508770000	B.113
UR20-PK-2453880000-SP	2508770000	B.82
UR20-PK-2456530000-SP	2593320000	B.113
UR20-PK-2456530000-SP	2593320000	B.53
UR20-PK-2456540000-SP	2545610000	B.113
UR20-PK-2456540000-SP	2545610000	B.72
UR20-PK-2457240000-SP	2545760000	B.113
UR20-PK-2457240000-SP	2545760000	B.34
UR20-PK-2457250000-SP	2545770000	B.113
UR20-PK-2457250000-SP	2545770000	B.49
UR20-PK-2464570000-SP	2466000000	B.101
UR20-PK-2464570000-SP	2466000000	B.113
UR20-PK-2464580000-SP	2465990000	B.113
UR20-PK-2464580000-SP	2465990000	B.99
UR20-PK-2464590000-SP	2465950000	B.102
UR20-PK-2464590000-SP	2465950000	B.113
UR20-PK-2464600000-SP	2465940000	B.100
UR20-PK-2464600000-SP	2465940000	B.113
UR20-PK-2476450000-SP	2485280000	B.11
UR20-PK-2476450000-SP	2485280000	B.113
UR20-PK-2544660000-SP	2550620000	B.68
UR20-PK-2555940000-SP	2593300000	B.113
UR20-PK-2555940000-SP	2593300000	B.73
UR20-PK-2566380000-SP	2623640000	B.113
UR20-PK-2566380000-SP	2623640000	B.7
UR20-PK-2614380000-SP	2623120000	B.113
UR20-PK-2614380000-SP	2623120000	B.5
UR20-PK-2674520000-SP	2665170000	A.4
UR20-SM-ACC	1339920000	A.4
UR20-SM-ACC	1339920000	A.5
UR20-SM-ACC	1339920000	A.6
UR20-SM-ACC	1339920000	B.100
UR20-SM-ACC	1339920000	B.101
UR20-SM-ACC	1339920000	B.102
UR20-SM-ACC	1339920000	B.103
UR20-SM-ACC	1339920000	B.104
UR20-SM-ACC	1339920000	B.105
UR20-SM-ACC	1339920000	B.107
UR20-SM-ACC	1339920000	B.108
UR20-SM-ACC	1339920000	B.11
UR20-SM-ACC	1339920000	B.111
UR20-SM-ACC	1339920000	B.112
UR20-SM-ACC	1339920000	B.115
UR20-SM-ACC	1339920000	B.13
UR20-SM-ACC	1339920000	B.15
UR20-SM-ACC	1339920000	B.17

Type	Order No.	Page
UR20-SM-ACC	1339920000	B.19
UR20-SM-ACC	1339920000	B.21
UR20-SM-ACC	1339920000	B.22
UR20-SM-ACC	1339920000	B.23
UR20-SM-ACC	1339920000	B.24
UR20-SM-ACC	1339920000	B.25
UR20-SM-ACC	1339920000	B.26
UR20-SM-ACC	1339920000	B.27
UR20-SM-ACC	1339920000	B.28
UR20-SM-ACC	1339920000	B.29
UR20-SM-ACC	1339920000	B.30
UR20-SM-ACC	1339920000	B.31
UR20-SM-ACC	1339920000	B.32
UR20-SM-ACC	1339920000	B.33
UR20-SM-ACC	1339920000	B.34
UR20-SM-ACC	1339920000	B.35
UR20-SM-ACC	1339920000	B.37
UR20-SM-ACC	1339920000	B.38
UR20-SM-ACC	1339920000	B.39
UR20-SM-ACC	1339920000	B.40
UR20-SM-ACC	1339920000	B.41
UR20-SM-ACC	1339920000	B.42
UR20-SM-ACC	1339920000	B.43
UR20-SM-ACC	1339920000	B.44
UR20-SM-ACC	1339920000	B.45
UR20-SM-ACC	1339920000	B.46
UR20-SM-ACC	1339920000	B.47
UR20-SM-ACC	1339920000	B.48
UR20-SM-ACC	1339920000	B.49
UR20-SM-ACC	1339920000	B.5
UR20-SM-ACC	1339920000	B.50
UR20-SM-ACC	1339920000	B.51
UR20-SM-ACC	1339920000	B.53
UR20-SM-ACC	1339920000	B.55
UR20-SM-ACC	1339920000	B.56
UR20-SM-ACC	1339920000	B.57
UR20-SM-ACC	1339920000	B.59
UR20-SM-ACC	1339920000	B.60
UR20-SM-ACC	1339920000	B.61
UR20-SM-ACC	1339920000	B.62
UR20-SM-ACC	1339920000	B.63
UR20-SM-ACC	1339920000	B.64
UR20-SM-ACC	1339920000	B.65
UR20-SM-ACC	1339920000	B.66
UR20-SM-ACC	1339920000	B.67
UR20-SM-ACC	1339920000	B.68
UR20-SM-ACC	1339920000	B.7
UR20-SM-ACC	1339920000	B.71
UR20-SM-ACC	1339920000	B.72
UR20-SM-ACC	1339920000	B.73
UR20-SM-ACC	1339920000	B.74
UR20-SM-ACC	1339920000	B.75
UR20-SM-ACC	1339920000	B.77
UR20-SM-ACC	1339920000	B.79
UR20-SM-ACC	1339920000	B.81
UR20-SM-ACC	1339920000	B.82
UR20-SM-ACC	1339920000	B.83
UR20-SM-ACC	1339920000	B.84
UR20-SM-ACC	1339920000	B.85
UR20-SM-ACC	1339920000	B.86
UR20-SM-ACC	1339920000	B.89
UR20-SM-ACC	1339920000	B.9
UR20-SM-ACC	1339920000	B.90
UR20-SM-ACC	1339920000	B.91
UR20-SM-ACC	1339920000	B.92
UR20-SM-ACC	1339920000	B.93
UR20-SM-ACC	1339920000	B.94
UR20-SM-ACC	1339920000	B.95
UR20-SM-ACC	1339920000	B.96
UR20-SM-ACC	1339920000	B.99
UR67-MP-78-16DI-12-60M	2426300000	C.38
UR67-MP-78-16DI-12-60M	2426300000	C.7
UR67-MP-78-16DIO-12-60M	2512830000	C.38
UR67-MP-78-16DIO-12-60M	2512830000	C.8
UR67-MP-78-16DO-12-60M	2426310000	C.38
UR67-MP-78-16DO-12-60M	2426310000	C.7
UR67-MP-78-8DIDO-12-60M	2426320000	C.38
UR67-MP-78-8DIDO-12-60M	2426320000	C.8
UR67-MP-HP-16DI-12-60M	2426270000	C.38
UR67-MP-HP-16DI-12-60M	2426270000	C.5
UR67-MP-HP-16DIO-12-60M	2512840000	C.38
UR67-MP-HP-16DIO-12-60M	2512840000	C.6
UR67-MP-HP-16DO-12-60M	2426280000	C.38
UR67-MP-HP-16DO-12-60M	2426280000	C.5
UR67-MP-HP-8DIDO-12-60M	2426290000	C.38
UR67-MP-HP-8DIDO-12-60M	2426290000	C.6
UR67-PB-12-8DI-8-30K	2426360000	C.13
UR67-PB-12-8DI-8-30K	2426360000	C.38
UR67-PB-12-8DIO-8-30K	2426330000	C.13
UR67-PB-12-8DIO-8-30K	2426330000	C.38
UR67-PB-78-16DI-12-60K	2426370000	C.14
UR67-PB-78-16DI-12-60K	2426370000	C.38
UR67-PB-78-16DI-12-60M	2426390000	C.15
UR67-PB-78-16DI-12-60M	2426390000	C.38
UR67-PB-78-16DIO-12-60K	2426340000	C.14
UR67-PB-78-16DIO-12-60K	2426340000	C.38
UR67-PB-78-16DO-12-60M	2426400000	C.15
UR67-PB-78-16DO-12-60M	2426400000	C.38
UR67-PB-78-8DIDO-12-60M	2426380000	C.16

Type	Order No.	Page
UR67-PB-78-8DIDO-12-60M	2426380000	C.38
UR67-PN-HP-8IOL-12-30M	2426250000	C.38
UR67-PN-HP-8IOL-12-30M	2426250000	C.4
UR67-PN-HP-8IOL-12-60M	2426260000	C.38
UR67-PN-HP-8IOL-12-60M	2426260000	C.4
UR67-PN-V14-CU-16DI-12	2599680000	C.38
UR67-PN-V14-CU-16DI-12	2599680000	C.9
UR67-PN-V14-CU-8DIDO-12	2599670000	C.38
UR67-PN-V14-CU-8DIDO-12	2599670000	C.9
UR67-PN-V14-POF-16DI-12	2599700000	C.10
UR67-PN-V14-POF-16DI-12	2599700000	C.38
UR67-PN-V14-POF-8DIDO-12	2599690000	C.10
UR67-PN-V14-POF-8DIDO-12	2599690000	C.38
UV20-B-IPC-1000.01	2676340000	E.4
UV20-B-IPC-1011.01	2665800000	E.4
UV20-B-IPC-1011.02	2676350000	E.5
UV20-B-IPC-2001.01	2676370000	E.6
UV20-B-IPC-2001.02	2665810000	E.6
UV20-B-IPC-2001.03	2676380000	E.7
UV20-B-IPC-3000.01	2676390000	E.8
UV20-B-IPC-3010.01	2676400000	E.8
UV20-B-IPC-3021.01	2676410000	E.9
UV20-B-IPC-3031.01	2665820000	E.9
UV20-B-IPC-3032.01	2676420000	E.9
UV66-ADV-10-CAP-W	2555840000	D.6
UV66-ADV-10-IPM-10	2676660000	E.13
UV66-ADV-10-IPPC-1001.01	2676460000	E.11
UV66-ADV-12-IPM-10	2676670000	E.13
UV66-ADV-12-IPPC-1001.01	2676480000	E.11
UV66-ADV-12-IPPC-3001.01	2676510000	E.12
UV66-ADV-12-IPPC-3022.01	2676520000	E.12
UV66-ADV-15-CAP-W	2555850000	D.7
UV66-ADV-15-IPM-10	2676680000	E.13
UV66-ADV-15-IPPC-1001.01	2676500000	E.11
UV66-ADV-15-IPPC-3001.01	2676530000	E.12
UV66-ADV-15-IPPC-3022.01	2676540000	E.12
UV66-ADV-18-IPM-10	2676690000	E.13
UV66-ADV-18-IPPC-3001.01	2676550000	E.12
UV66-ADV-18-IPPC-3022.01	2676560000	E.12
UV66-ADV-21-IPM-10	2676700000	E.13
UV66-ADV-21-IPPC-3001.01	2676570000	E.12
UV66-ADV-21-IPPC-3022.01	2676580000	E.12
UV66-ADV-7-CAP-W	2555830000	D.6
UV66-ADV-7-IPPC-1001.01	2665830000	E.11
UV66-BAS-10-IPPC-1001.01	2676450000	E.10
UV66-BAS-10-RES-W	2555820000	D.5
UV66-BAS-12-IPPC-1001.01	2676470000	E.10
UV66-BAS-15-IPPC-1001.01	2676490000	E.10
UV66-BAS-4-RES-W	2555800000	D.4
UV66-BAS-7-IPPC-1001.01	2676430000	E.10
UV66-BAS-7-RES-W	2555810000	D.4

Order No.	Type	Page
1060000000		
0224261001	RS F20 LP2N 5/20	B.66
1000000000		
1004330150	SAIL-M12BW-3L1.5T	C.36
1007000150	SAIL-M12BW-4-2L1.5T	C.36
1020000000		
1025950015	IE-C5DD4UG0015MCSMCS-E	C.4
1025950015	IE-C5DD4UG0015MCSMCS-E	C.5
1025950015	IE-C5DD4UG0015MCSMCS-E	C.6
1025950015	IE-C5DD4UG0015MCSMCS-E	C.7
1025950015	IE-C5DD4UG0015MCSMCS-E	C.8
1027290000	ESG-M 8/20 MC NE WS	C.15
1027290000	ESG-M 8/20 MC NE WS	C.16
1027290000	ESG-M 8/20 MC NE WS	C.4
1027290000	ESG-M 8/20 MC NE WS	C.5
1027290000	ESG-M 8/20 MC NE WS	C.6
1027290000	ESG-M 8/20 MC NE WS	C.7
1027290000	ESG-M 8/20 MC NE WS	C.8
1040000000		
1044470015	IE-C5DD4UG0015MCSA20-E	C.4
1044470015	IE-C5DD4UG0015MCSA20-E	C.5
1044470015	IE-C5DD4UG0015MCSA20-E	C.6
1090000000		
1092910150	SAIL-M12BG-3-1.5UGE	C.34
1092920150	SAIL-M12BG-4-1.5UGE	C.34
1092940150	SAIL-M12BW-3-1.5UGE	C.34
1092950150	SAIL-M12BW-4-2L1.5UGE	C.36
1092960150	SAIL-M12BW-4-1.5UGE	C.34
1093190150	SAIL-M8BG-3-1.5UGE	C.35
1093200150	SAIL-M8BG-4-1.5UGE	C.35
1093210150	SAIL-M8BW-3L1.5UGE	C.36
1093220150	SAIL-M8BW-3-1.5UGE	C.35
1093230150	SAIL-M8BW-4L1.5UGE	C.36
1093240150	SAIL-M8BW-4-1.5UGE	C.35
1110000000		
1114880150	SAIL-M12BW-3L1.5UGE	C.36
1310000000		
1315170000	UR20-4DI-P	B.113
1315170000	UR20-4DI-P	B.114
1315170000	UR20-4DI-P	B.21
1315180000	UR20-8DI-P-2W	B.113
1315180000	UR20-8DI-P-2W	B.114
1315180000	UR20-8DI-P-2W	B.23
1315190000	UR20-8DI-P-3W-HD	B.113
1315190000	UR20-8DI-P-3W-HD	B.114
1315190000	UR20-8DI-P-3W-HD	B.25
1315200000	UR20-16DI-P	B.113
1315200000	UR20-16DI-P	B.114
1315200000	UR20-16DI-P	B.26
1315210000	UR20-16DI-P-PLC-INT	B.113
1315210000	UR20-16DI-P-PLC-INT	B.114
1315210000	UR20-16DI-P-PLC-INT	B.27
1315220000	UR20-4DO-P	B.113
1315220000	UR20-4DO-P	B.114
1315220000	UR20-4DO-P	B.37
1315230000	UR20-4DO-P-2A	B.113
1315230000	UR20-4DO-P-2A	B.114
1315230000	UR20-4DO-P-2A	B.38
1315240000	UR20-8DO-P	B.113
1315240000	UR20-8DO-P	B.114
1315240000	UR20-8DO-P	B.40
1315250000	UR20-16DO-P	B.113
1315250000	UR20-16DO-P	B.114
1315250000	UR20-16DO-P	B.42
1315270000	UR20-16DO-P-PLC-INT	B.113
1315270000	UR20-16DO-P-PLC-INT	B.114
1315270000	UR20-16DO-P-PLC-INT	B.43
1315350000	UR20-4DI-N	B.113
1315350000	UR20-4DI-N	B.114
1315350000	UR20-4DI-N	B.30
1315370000	UR20-8DI-N-3W	B.113
1315370000	UR20-8DI-N-3W	B.114
1315370000	UR20-8DI-N-3W	B.31
1315390000	UR20-16DI-N	B.113
1315390000	UR20-16DI-N	B.114
1315390000	UR20-16DI-N	B.32
1315400000	UR20-16DI-N-PLC-INT	B.113
1315400000	UR20-16DI-N-PLC-INT	B.114
1315400000	UR20-16DI-N-PLC-INT	B.33
1315410000	UR20-4DO-N	B.113
1315410000	UR20-4DO-N	B.114
1315410000	UR20-4DO-N	B.44
1315420000	UR20-4DO-N-2A	B.113
1315420000	UR20-4DO-N-2A	B.114
1315420000	UR20-4DO-N-2A	B.45
1315430000	UR20-8DO-N	B.113
1315430000	UR20-8DO-N	B.114
1315430000	UR20-8DO-N	B.46

Order No.	Type	Page
1315440000	UR20-16DO-N	B.113
1315440000	UR20-16DO-N	B.114
1315440000	UR20-16DO-N	B.47
1315450000	UR20-16DO-N-PLC-INT	B.113
1315450000	UR20-16DO-N-PLC-INT	B.114
1315450000	UR20-16DO-N-PLC-INT	B.48
1315540000	UR20-4RO-SSR-255	B.113
1315540000	UR20-4RO-SSR-255	B.114
1315540000	UR20-4RO-SSR-255	B.50
1315550000	UR20-4RO-CO-255	B.113
1315550000	UR20-4RO-CO-255	B.114
1315550000	UR20-4RO-CO-255	B.51
1315570000	UR20-1CNT-100-1DO	B.113
1315570000	UR20-1CNT-100-1DO	B.114
1315570000	UR20-1CNT-100-1DO	B.89
1315580000	UR20-1CNT-500	B.113
1315580000	UR20-1CNT-500	B.114
1315580000	UR20-1CNT-500	B.91
1315590000	UR20-2CNT-100	B.113
1315590000	UR20-2CNT-100	B.114
1315590000	UR20-2CNT-100	B.90
1315600000	UR20-2PWM-PN-0.5A	B.113
1315600000	UR20-2PWM-PN-0.5A	B.114
1315600000	UR20-2PWM-PN-0.5A	B.55
1315610000	UR20-2PWM-PN-2A	B.113
1315610000	UR20-2PWM-PN-2A	B.114
1315610000	UR20-2PWM-PN-2A	B.56
1315620000	UR20-4AI-UI-16	B.113
1315620000	UR20-4AI-UI-16	B.114
1315620000	UR20-4AI-UI-16	B.60
1315650000	UR20-8AI-I-16-HD	B.113
1315650000	UR20-8AI-I-16-HD	B.114
1315650000	UR20-8AI-I-16-HD	B.64
1315670000	UR20-8AI-I-PLC-INT	B.113
1315670000	UR20-8AI-I-PLC-INT	B.114
1315670000	UR20-8AI-I-PLC-INT	B.66
1315680000	UR20-4AO-UI-16	B.113
1315680000	UR20-4AO-UI-16	B.114
1315680000	UR20-4AO-UI-16	B.81
1315690000	UR20-4AI-UI-16-DIAG	B.113
1315690000	UR20-4AI-UI-16-DIAG	B.114
1315690000	UR20-4AI-UI-16-DIAG	B.61
1315700000	UR20-4AI-RTD-DIAG	B.113
1315700000	UR20-4AI-RTD-DIAG	B.114
1315700000	UR20-4AI-RTD-DIAG	B.71
1315710000	UR20-4AI-TC-DIAG	B.113
1315710000	UR20-4AI-TC-DIAG	B.114
1315710000	UR20-4AI-TC-DIAG	B.74
1315720000	UR20-8AI-I-16-DIAG-HD	B.113
1315720000	UR20-8AI-I-16-DIAG-HD	B.114
1315720000	UR20-8AI-I-16-DIAG-HD	B.65
1315730000	UR20-4AO-UI-16-DIAG	B.113
1315730000	UR20-4AO-UI-16-DIAG	B.114
1315730000	UR20-4AO-UI-16-DIAG	B.83
1315740000	UR20-4COM-IO-LINK	B.113
1315740000	UR20-4COM-IO-LINK	B.114
1315740000	UR20-4COM-IO-LINK	B.96
1315750000	UR20-1COM-232-485-422	B.113
1315750000	UR20-1COM-232-485-422	B.114
1315750000	UR20-1COM-232-485-422	B.94
1315770000	UR20-ES	B.112
1315770000	UR20-ES	B.113
1315770000	UR20-ES	B.115
1320000000		
1323700000	PM 2.7/2.6 MC SDR	A.4
1323700000	PM 2.7/2.6 MC SDR	A.5
1323700000	PM 2.7/2.6 MC SDR	A.6
1323700000	PM 2.7/2.6 MC SDR	B.100
1323700000	PM 2.7/2.6 MC SDR	B.101
1323700000	PM 2.7/2.6 MC SDR	B.102
1323700000	PM 2.7/2.6 MC SDR	B.103
1323700000	PM 2.7/2.6 MC SDR	B.104
1323700000	PM 2.7/2.6 MC SDR	B.105
1323700000	PM 2.7/2.6 MC SDR	B.107
1323700000	PM 2.7/2.6 MC SDR	B.108
1323700000	PM 2.7/2.6 MC SDR	B.11
1323700000	PM 2.7/2.6 MC SDR	B.111
1323700000	PM 2.7/2.6 MC SDR	B.112
1323700000	PM 2.7/2.6 MC SDR	B.115
1323700000	PM 2.7/2.6 MC SDR	B.13
1323700000	PM 2.7/2.6 MC SDR	B.15
1323700000	PM 2.7/2.6 MC SDR	B.17
1323700000	PM 2.7/2.6 MC SDR	B.19
1323700000	PM 2.7/2.6 MC SDR	B.21
1323700000	PM 2.7/2.6 MC SDR	B.22
1323700000	PM 2.7/2.6 MC SDR	B.23
1323700000	PM 2.7/2.6 MC SDR	B.24
1323700000	PM 2.7/2.6 MC SDR	B.26
1323700000	PM 2.7/2.6 MC SDR	B.27
1323700000	PM 2.7/2.6 MC SDR	B.29
1323700000	PM 2.7/2.6 MC SDR	B.30
1323700000	PM 2.7/2.6 MC SDR	B.31
1323700000	PM 2.7/2.6 MC SDR	B.32
1323700000	PM 2.7/2.6 MC SDR	B.34
1323700000	PM 2.7/2.6 MC SDR	B.35

Order No.	Type	Page
1323700000	PM 2.7/2.6 MC SDR	B.37
1323700000	PM 2.7/2.6 MC SDR	B.38
1323700000	PM 2.7/2.6 MC SDR	B.39
1323700000	PM 2.7/2.6 MC SDR	B.40
1323700000	PM 2.7/2.6 MC SDR	B.42
1323700000	PM 2.7/2.6 MC SDR	B.43
1323700000	PM 2.7/2.6 MC SDR	B.44
1323700000	PM 2.7/2.6 MC SDR	B.45
1323700000	PM 2.7/2.6 MC SDR	B.46
1323700000	PM 2.7/2.6 MC SDR	B.47
1323700000	PM 2.7/2.6 MC SDR	B.48
1323700000	PM 2.7/2.6 MC SDR	B.49
1323700000	PM 2.7/2.6 MC SDR	B.5
1323700000	PM 2.7/2.6 MC SDR	B.50
1323700000	PM 2.7/2.6 MC SDR	B.51
1323700000	PM 2.7/2.6 MC SDR	B.53
1323700000	PM 2.7/2.6 MC SDR	B.55
1323700000	PM 2.7/2.6 MC SDR	B.56
1323700000	PM 2.7/2.6 MC SDR	B.57
1323700000	PM 2.7/2.6 MC SDR	B.59
1323700000	PM 2.7/2.6 MC SDR	B.60
1323700000	PM 2.7/2.6 MC SDR	B.61
1323700000	PM 2.7/2.6 MC SDR	B.66
1323700000	PM 2.7/2.6 MC SDR	B.67
1323700000	PM 2.7/2.6 MC SDR	B.68
1323700000	PM 2.7/2.6 MC SDR	B.7
1323700000	PM 2.7/2.6 MC SDR	B.71
1323700000	PM 2.7/2.6 MC SDR	B.72
1323700000	PM 2.7/2.6 MC SDR	B.73
1323700000	PM 2.7/2.6 MC SDR	B.74
1323700000	PM 2.7/2.6 MC SDR	B.75
1323700000	PM 2.7/2.6 MC SDR	B.77
1323700000	PM 2.7/2.6 MC SDR	B.79
1323700000	PM 2.7/2.6 MC SDR	B.81
1323700000	PM 2.7/2.6 MC SDR	B.82
1323700000	PM 2.7/2.6 MC SDR	B.83
1323700000	PM 2.7/2.6 MC SDR	B.84
1323700000	PM 2.7/2.6 MC SDR	B.89
1323700000	PM 2.7/2.6 MC SDR	B.9
1323700000	PM 2.7/2.6 MC SDR	B.90
1323700000	PM 2.7/2.6 MC SDR	B.91
1323700000	PM 2.7/2.6 MC SDR	B.92
1323700000	PM 2.7/2.6 MC SDR	B.93
1323700000	PM 2.7/2.6 MC SDR	B.94
1323700000	PM 2.7/2.6 MC SDR	B.95
1323700000	PM 2.7/2.6 MC SDR	B.96
1323700000	PM 2.7/2.6 MC SDR	B.99
1323710000	PM 2.7/2.6 MC NE WS	A.4
1323710000	PM 2.7/2.6 MC NE WS	A.5
1323710000	PM 2.7/2.6 MC NE WS	A.6
1323710000	PM 2.7/2.6 MC NE WS	B.100
1323710000	PM 2.7/2.6 MC NE WS	B.101
1323710000	PM 2.7/2.6 MC NE WS	B.102
1323710000	PM 2.7/2.6 MC NE WS	B.103
1323710000	PM 2.7/2.6 MC NE WS	B.104
1323710000	PM 2.7/2.6 MC NE WS	B.105
1323710000	PM 2.7/2.6 MC NE WS	B.107
1323710000	PM 2.7/2.6 MC NE WS	B.108
1323710000	PM 2.7/2.6 MC NE WS	B.11
1323710000	PM 2.7/2.6 MC NE WS	B.111
1323710000	PM 2.7/2.6 MC NE WS	B.112
1323710000	PM 2.7/2.6 MC NE WS	B.115
1323710000	PM 2.7/2.6 MC NE WS	B.13
1323710000	PM 2.7/2.6 MC NE WS	B.15
1323710000	PM 2.7/2.6 MC NE WS	B.17
1323710000	PM 2.7/2.6 MC NE WS	B.19
1323710000	PM 2.7/2.6 MC NE WS	B.21
1323710000	PM 2.7/2.6 MC NE WS	B.22
1323710000	PM 2.7/2.6 MC NE WS	B.23
1323710000	PM 2.7/2.6 MC NE WS	B.24
1323710000	PM 2.7/2.6 MC NE WS	B.26
1323710000	PM 2.7/2.6 MC NE WS	B.27
1323710000	PM 2.7/2.6 MC NE WS	B.28
1323710000	PM 2.7/2.6 MC NE WS	B.29
1323710000	PM 2.7/2.6 MC NE WS	B.30
1323710000	PM 2.7/2.6 MC NE WS	B.31
1323710000	PM 2.7/2.6 MC NE WS	B.32
1323710000	PM 2.7/2.6 MC NE WS	B.33
1323710000	PM 2.7/2.6 MC NE WS	B.34
1323710000	PM 2.7/2.6 MC NE WS	B.35
1323710000	PM 2.7/2.6 MC NE WS	B.37
1323710000	PM 2.7/2.6 MC NE WS	B.38
1323710000	PM 2.7/2.6 MC NE WS	B.39
1323710000	PM 2.7/2.6 MC NE WS	B.40
1323710000	PM 2.7/2.6 MC NE WS	B.42
1323710000	PM 2.7/2.6 MC NE WS	B.43
1323710000	PM 2.7/2.6 MC NE WS	B.44
1323710000	PM 2.7/2.6 MC NE WS	B.45
1323710000	PM 2.7/2.6 MC NE WS	B.46
1323710000	PM 2.7/2.6 MC NE WS	B.47
1323710000	PM 2.7/2.6 MC NE WS	B.48
1323710000	PM 2.7/2.6 MC NE WS	B.49
1323710000	PM 2.7/2.6 MC NE WS	B.5
1323710000	PM 2.7/2.6 MC NE WS	B.50
1323710000	PM 2.7/2.6 MC NE WS	B.51
1323710000	PM 2.7/2.6 MC NE WS	B.53
1323710000	PM 2.7/2.6 MC NE WS	B.55
1323710000	PM 2.7/2.6 MC NE WS	B.56
1323710000	PM 2.7/2.6 MC NE WS	B.57

Order No.	Type	Page
1323710000	PM 2.7/2.6 MC NE WS	B.59
1323710000	PM 2.7/2.6 MC NE WS	B.60
1323710000	PM 2.7/2.6 MC NE WS	B.61
1323710000	PM 2.7/2.6 MC NE WS	B.66
1323710000	PM 2.7/2.6 MC NE WS	B.67
1323710000	PM 2.7/2.6 MC NE WS	B.68
1323710000	PM 2.7/2.6 MC NE WS	B.7
1323710000	PM 2.7/2.6 MC NE WS	B.71
1323710000	PM 2.7/2.6 MC NE WS	B.72
1323710000	PM 2.7/2.6 MC NE WS	B.73
1323710000	PM 2.7/2.6 MC NE WS	B.74
1323710000	PM 2.7/2.6 MC NE WS	B.75
1323710000	PM 2.7/2.6 MC NE WS	B.77
1323710000	PM 2.7/2.6 MC NE WS	B.79
1323710000	PM 2.7/2.6 MC NE WS	B.81
1323710000	PM 2.7/2.6 MC NE WS	B.82
1323710000	PM 2.7/2.6 MC NE WS	B.83
1323710000	PM 2.7/2.6 MC NE WS	B.84
1323710000	PM 2.7/2.6 MC NE WS	B.89
1323710000	PM 2.7/2.6 MC NE WS	B.9
1323710000	PM 2.7/2.6 MC NE WS	B.90
1323710000	PM 2.7/2.6 MC NE WS	B.91
1323710000	PM 2.7/2.6 MC NE WS	B.92
1323710000	PM 2.7/2.6 MC NE WS	B.93
1323710000	PM 2.7/2.6 MC NE WS	B.94
1323710000	PM 2.7/2.6 MC NE WS	B.95
1323710000	PM 2.7/2.6 MC NE WS	B.96
1323710000	PM 2.7/2.6 MC NE WS	B.99
1330000000		
1334710000	UR20-PF-I	B.107
1334710000	UR20-PF-I	B.113
1334710000	UR20-PF-I	B.115
1334740000	UR20-PF-O	B.108
1334740000	UR20-PF-O	B.113
1334740000	UR20-PF-O	B.115
1334770000	UR20-16AUX-I	B.111
1334770000	UR20-16AUX-I	B.113
1334770000	UR20-16AUX-I	B.115
1334780000	UR20-16AUX-O	B.111
1334780000	UR20-16AUX-O	B.113
1334780000	UR20-16AUX-O	B.115
1334790000	UR20-16AUX-FE	B.111
1334790000	UR20-16AUX-FE	B.113
1334790000	UR20-16AUX-FE	B.115
1334800000	UR20-16AUX-GND-I	B.111
1334800000	UR20-16AUX-GND-I	B.113
1334800000	UR20-16AUX-GND-I	B.115
1334810000	UR20-16AUX-GND-O	B.111
1334810000	UR20-16AUX-GND-O	B.113
1334810000	UR20-16AUX-GND-O	B.115
1334890000	UR20-FBC-CAN	B.113
1334890000	UR20-FBC-CAN	B.114
1334890000	UR20-FBC-CAN	B.17
1334900000	UR20-FBC-DN	B.113
1334900000	UR20-FBC-DN	B.114
1334900000	UR20-FBC-DN	B.15
1334910000	UR20-FBC-EC	B.113
1334910000	UR20-FBC-EC	B.114
1334910000	UR20-FBC-EC	B.9
1334920000	UR20-FBC-EIP	B.113
1334920000	UR20-FBC-EIP	B.114
1334920000	UR20-FBC-EIP	B.13
1334940000	UR20-FBC-PL	B.113
1334940000	UR20-FBC-PL	B.114
1334940000	UR20-FBC-PL	B.19
1334950000	UC20-WL2000-AC	A.5
1334990000	UC20-WL2000-IOT	A.6
1335030000	UR20-PF-O-1DI-SIL	B.103
1335030000	UR20-PF-O-1DI-SIL	B.113
1335030000	UR20-PF-O-1DI-SIL	B.115
1335040000	UR20-PF-O-2DI-DELAY-SIL	B.105
1335040000	UR20-PF-O-2DI-DELAY-SIL	B.113
1335040000	UR20-PF-O-2DI-DELAY-SIL	B.115
1335050000	UR20-PF-O-2DI-SIL	B.104
1335050000	UR20-PF-O-2DI-SIL	B.113
1335050000	UR20-PF-O-2DI-SIL	B.115
1339920000	UR20-SM-ACC	A.4
1339920000	UR20-SM-ACC	A.5
1339920000	UR20-SM-ACC	A.6
1339920000	UR20-SM-ACC	B.100
1339920000	UR20-SM-ACC	B.101
1339920000	UR20-SM-ACC	B.102
1339920000	UR20-SM-ACC	B.103
1339920000	UR20-SM-ACC	B.104
1339920000	UR20-SM-ACC	B.105
1339920000	UR20-SM-ACC	B.107
1339920000	UR20-SM-ACC	B.108
1339920000	UR20-SM-ACC	B.11
1339920000	UR20-SM-ACC	B.111
1339920000	UR20-SM-ACC	B.112
1339920000	UR20-SM-ACC	B.115
1339920000	UR20-SM-ACC	B.13
1339920000	UR20-SM-ACC	B.15
1339920000	UR20-SM-ACC	B.17
1339920000	UR20-SM-ACC	B.19
1339920000	UR20-SM-ACC	B.21
1339920000	UR20-SM-ACC	B.22

Order No.	Type	Page
1339920000	UR20-SM-ACC	B.23
1339920000	UR20-SM-ACC	B.24
1339920000	UR20-SM-ACC	B.25
1339920000	UR20-SM-ACC	B.26
1339920000	UR20-SM-ACC	B.27
1339920000	UR20-SM-ACC	B.28
1339920000	UR20-SM-ACC	B.29
1339920000	UR20-SM-ACC	B.30
1339920000	UR20-SM-ACC	B.31
1339920000	UR20-SM-ACC	B.32
1339920000	UR20-SM-ACC	B.33
1339920000	UR20-SM-ACC	B.34
1339920000	UR20-SM-ACC	B.35
1339920000	UR20-SM-ACC	B.37
1339920000	UR20-SM-ACC	B.38
1339920000	UR20-SM-ACC	B.39
1339920000	UR20-SM-ACC	B.40
1339920000	UR20-SM-ACC	B.41
1339920000	UR20-SM-ACC	B.42
1339920000	UR20-SM-ACC	B.43
1339920000	UR20-SM-ACC	B.44
1339920000	UR20-SM-ACC	B.45
1339920000	UR20-SM-ACC	B.46
1339920000	UR20-SM-ACC	B.47
1339920000	UR20-SM-ACC	B.48
1339920000	UR20-SM-ACC	B.49
1339920000	UR20-SM-ACC	B.5
1339920000	UR20-SM-ACC	B.50
1339920000	UR20-SM-ACC	B.51
1339920000	UR20-SM-ACC	B.53
1339920000	UR20-SM-ACC	B.55
1339920000	UR20-SM-ACC	B.56
1339920000	UR20-SM-ACC	B.57
1339920000	UR20-SM-ACC	B.59
1339920000	UR20-SM-ACC	B.60
1339920000	UR20-SM-ACC	B.61
1339920000	UR20-SM-ACC	B.62
1339920000	UR20-SM-ACC	B.63
1339920000	UR20-SM-ACC	B.64
1339920000	UR20-SM-ACC	B.65
1339920000	UR20-SM-ACC	B.66
1339920000	UR20-SM-ACC	B.67
1339920000	UR20-SM-ACC	B.68
1339920000	UR20-SM-ACC	B.7
1339920000	UR20-SM-ACC	B.71
1339920000	UR20-SM-ACC	B.72
1339920000	UR20-SM-ACC	B.73
1339920000	UR20-SM-ACC	B.74
1339920000	UR20-SM-ACC	B.75
1339920000	UR20-SM-ACC	B.77
1339920000	UR20-SM-ACC	B.79
1339920000	UR20-SM-ACC	B.81
1339920000	UR20-SM-ACC	B.82
1339920000	UR20-SM-ACC	B.83
1339920000	UR20-SM-ACC	B.84
1339920000	UR20-SM-ACC	B.85
1339920000	UR20-SM-ACC	B.86
1339920000	UR20-SM-ACC	B.89
1339920000	UR20-SM-ACC	B.9
1339920000	UR20-SM-ACC	B.90
1339920000	UR20-SM-ACC	B.91
1339920000	UR20-SM-ACC	B.92
1339920000	UR20-SM-ACC	B.93
1339920000	UR20-SM-ACC	B.94
1339920000	UR20-SM-ACC	B.95
1339920000	UR20-SM-ACC	B.96
1339920000	UR20-SM-ACC	B.99

1340000000

1341610000	DEK 5/8-11.5 MC SDR	A.4
1341610000	DEK 5/8-11.5 MC SDR	A.5
1341610000	DEK 5/8-11.5 MC SDR	A.6
1341610000	DEK 5/8-11.5 MC SDR	B.100
1341610000	DEK 5/8-11.5 MC SDR	B.101
1341610000	DEK 5/8-11.5 MC SDR	B.102
1341610000	DEK 5/8-11.5 MC SDR	B.103
1341610000	DEK 5/8-11.5 MC SDR	B.104
1341610000	DEK 5/8-11.5 MC SDR	B.105
1341610000	DEK 5/8-11.5 MC SDR	B.107
1341610000	DEK 5/8-11.5 MC SDR	B.108
1341610000	DEK 5/8-11.5 MC SDR	B.11
1341610000	DEK 5/8-11.5 MC SDR	B.111
1341610000	DEK 5/8-11.5 MC SDR	B.112
1341610000	DEK 5/8-11.5 MC SDR	B.115
1341610000	DEK 5/8-11.5 MC SDR	B.13
1341610000	DEK 5/8-11.5 MC SDR	B.15
1341610000	DEK 5/8-11.5 MC SDR	B.17
1341610000	DEK 5/8-11.5 MC SDR	B.19
1341610000	DEK 5/8-11.5 MC SDR	B.21
1341610000	DEK 5/8-11.5 MC SDR	B.22
1341610000	DEK 5/8-11.5 MC SDR	B.23
1341610000	DEK 5/8-11.5 MC SDR	B.24
1341610000	DEK 5/8-11.5 MC SDR	B.25
1341610000	DEK 5/8-11.5 MC SDR	B.26
1341610000	DEK 5/8-11.5 MC SDR	B.27
1341610000	DEK 5/8-11.5 MC SDR	B.28
1341610000	DEK 5/8-11.5 MC SDR	B.29
1341610000	DEK 5/8-11.5 MC SDR	B.30

Order No.	Type	Page
1341610000	DEK 5/8-11.5 MC SDR	B.31
1341610000	DEK 5/8-11.5 MC SDR	B.32
1341610000	DEK 5/8-11.5 MC SDR	B.33
1341610000	DEK 5/8-11.5 MC SDR	B.34
1341610000	DEK 5/8-11.5 MC SDR	B.35
1341610000	DEK 5/8-11.5 MC SDR	B.37
1341610000	DEK 5/8-11.5 MC SDR	B.38
1341610000	DEK 5/8-11.5 MC SDR	B.39
1341610000	DEK 5/8-11.5 MC SDR	B.40
1341610000	DEK 5/8-11.5 MC SDR	B.41
1341610000	DEK 5/8-11.5 MC SDR	B.42
1341610000	DEK 5/8-11.5 MC SDR	B.43
1341610000	DEK 5/8-11.5 MC SDR	B.44
1341610000	DEK 5/8-11.5 MC SDR	B.45
1341610000	DEK 5/8-11.5 MC SDR	B.46
1341610000	DEK 5/8-11.5 MC SDR	B.47
1341610000	DEK 5/8-11.5 MC SDR	B.48
1341610000	DEK 5/8-11.5 MC SDR	B.49
1341610000	DEK 5/8-11.5 MC SDR	B.5
1341610000	DEK 5/8-11.5 MC SDR	B.50
1341610000	DEK 5/8-11.5 MC SDR	B.51
1341610000	DEK 5/8-11.5 MC SDR	B.53
1341610000	DEK 5/8-11.5 MC SDR	B.55
1341610000	DEK 5/8-11.5 MC SDR	B.56
1341610000	DEK 5/8-11.5 MC SDR	B.57
1341610000	DEK 5/8-11.5 MC SDR	B.59
1341610000	DEK 5/8-11.5 MC SDR	B.60
1341610000	DEK 5/8-11.5 MC SDR	B.61
1341610000	DEK 5/8-11.5 MC SDR	B.62
1341610000	DEK 5/8-11.5 MC SDR	B.63
1341610000	DEK 5/8-11.5 MC SDR	B.64
1341610000	DEK 5/8-11.5 MC SDR	B.65
1341610000	DEK 5/8-11.5 MC SDR	B.66
1341610000	DEK 5/8-11.5 MC SDR	B.67
1341610000	DEK 5/8-11.5 MC SDR	B.68
1341610000	DEK 5/8-11.5 MC SDR	B.7
1341610000	DEK 5/8-11.5 MC SDR	B.71
1341610000	DEK 5/8-11.5 MC SDR	B.72
1341610000	DEK 5/8-11.5 MC SDR	B.73
1341610000	DEK 5/8-11.5 MC SDR	B.74
1341610000	DEK 5/8-11.5 MC SDR	B.75
1341610000	DEK 5/8-11.5 MC SDR	B.77
1341610000	DEK 5/8-11.5 MC SDR	B.79
1341610000	DEK 5/8-11.5 MC SDR	B.81
1341610000	DEK 5/8-11.5 MC SDR	B.82
1341610000	DEK 5/8-11.5 MC SDR	B.83
1341610000	DEK 5/8-11.5 MC SDR	B.84
1341610000	DEK 5/8-11.5 MC SDR	B.85
1341610000	DEK 5/8-11.5 MC SDR	B.86
1341610000	DEK 5/8-11.5 MC SDR	B.89
1341610000	DEK 5/8-11.5 MC SDR	B.9
1341610000	DEK 5/8-11.5 MC SDR	B.90
1341610000	DEK 5/8-11.5 MC SDR	B.91
1341610000	DEK 5/8-11.5 MC SDR	B.92
1341610000	DEK 5/8-11.5 MC SDR	B.93
1341610000	DEK 5/8-11.5 MC SDR	B.94
1341610000	DEK 5/8-11.5 MC SDR	B.95
1341610000	DEK 5/8-11.5 MC SDR	B.96
1341610000	DEK 5/8-11.5 MC SDR	B.99
1341630000	DEK 5/8-11.5 MC NE WS	A.4
1341630000	DEK 5/8-11.5 MC NE WS	A.5
1341630000	DEK 5/8-11.5 MC NE WS	A.6
1341630000	DEK 5/8-11.5 MC NE WS	B.100
1341630000	DEK 5/8-11.5 MC NE WS	B.101
1341630000	DEK 5/8-11.5 MC NE WS	B.102
1341630000	DEK 5/8-11.5 MC NE WS	B.103
1341630000	DEK 5/8-11.5 MC NE WS	B.104
1341630000	DEK 5/8-11.5 MC NE WS	B.105
1341630000	DEK 5/8-11.5 MC NE WS	B.107
1341630000	DEK 5/8-11.5 MC NE WS	B.108
1341630000	DEK 5/8-11.5 MC NE WS	B.11
1341630000	DEK 5/8-11.5 MC NE WS	B.111
1341630000	DEK 5/8-11.5 MC NE WS	B.112
1341630000	DEK 5/8-11.5 MC NE WS	B.115
1341630000	DEK 5/8-11.5 MC NE WS	B.13
1341630000	DEK 5/8-11.5 MC NE WS	B.15
1341630000	DEK 5/8-11.5 MC NE WS	B.17
1341630000	DEK 5/8-11.5 MC NE WS	B.19
1341630000	DEK 5/8-11.5 MC NE WS	B.21
1341630000	DEK 5/8-11.5 MC NE WS	B.22
1341630000	DEK 5/8-11.5 MC NE WS	B.23
1341630000	DEK 5/8-11.5 MC NE WS	B.24
1341630000	DEK 5/8-11.5 MC NE WS	B.25
1341630000	DEK 5/8-11.5 MC NE WS	B.26
1341630000	DEK 5/8-11.5 MC NE WS	B.27
1341630000	DEK 5/8-11.5 MC NE WS	B.28
1341630000	DEK 5/8-11.5 MC NE WS	B.29
1341630000	DEK 5/8-11.5 MC NE WS	B.30
1341630000	DEK 5/8-11.5 MC NE WS	B.31
1341630000	DEK 5/8-11.5 MC NE WS	B.32
1341630000	DEK 5/8-11.5 MC NE WS	B.33
1341630000	DEK 5/8-11.5 MC NE WS	B.34
1341630000	DEK 5/8-11.5 MC NE WS	B.35
1341630000	DEK 5/8-11.5 MC NE WS	B.37
1341630000	DEK 5/8-11.5 MC NE WS	B.38
1341630000	DEK 5/8-11.5 MC NE WS	B.39
1341630000	DEK 5/8-11.5 MC NE WS	B.40
1341630000	DEK 5/8-11.5 MC NE WS	B.41
1341630000	DEK 5/8-11.5 MC NE WS	B.42

Order No.	Type	Page
1341630000	DEK 5/8-11.5 MC NE WS	B.43
1341630000	DEK 5/8-11.5 MC NE WS	B.44
1341630000	DEK 5/8-11.5 MC NE WS	B.45
1341630000	DEK 5/8-11.5 MC NE WS	B.46
1341630000	DEK 5/8-11.5 MC NE WS	B.47
1341630000	DEK 5/8-11.5 MC NE WS	B.48
1341630000	DEK 5/8-11.5 MC NE WS	B.49
1341630000	DEK 5/8-11.5 MC NE WS	B.5
1341630000	DEK 5/8-11.5 MC NE WS	B.50
1341630000	DEK 5/8-11.5 MC NE WS	B.51
1341630000	DEK 5/8-11.5 MC NE WS	B.53
1341630000	DEK 5/8-11.5 MC NE WS	B.55
1341630000	DEK 5/8-11.5 MC NE WS	B.56
1341630000	DEK 5/8-11.5 MC NE WS	B.57
1341630000	DEK 5/8-11.5 MC NE WS	B.59
1341630000	DEK 5/8-11.5 MC NE WS	B.60
1341630000	DEK 5/8-11.5 MC NE WS	B.61
1341630000	DEK 5/8-11.5 MC NE WS	B.62
1341630000	DEK 5/8-11.5 MC NE WS	B.63
1341630000	DEK 5/8-11.5 MC NE WS	B.64
1341630000	DEK 5/8-11.5 MC NE WS	B.65
1341630000	DEK 5/8-11.5 MC NE WS	B.66
1341630000	DEK 5/8-11.5 MC NE WS	B.67
1341630000	DEK 5/8-11.5 MC NE WS	B.68
1341630000	DEK 5/8-11.5 MC NE WS	B.7
1341630000	DEK 5/8-11.5 MC NE WS	B.71
1341630000	DEK 5/8-11.5 MC NE WS	B.72
1341630000	DEK 5/8-11.5 MC NE WS	B.73
1341630000	DEK 5/8-11.5 MC NE WS	B.74
1341630000	DEK 5/8-11.5 MC NE WS	B.75
1341630000	DEK 5/8-11.5 MC NE WS	B.77
1341630000	DEK 5/8-11.5 MC NE WS	B.79
1341630000	DEK 5/8-11.5 MC NE WS	B.81
1341630000	DEK 5/8-11.5 MC NE WS	B.82
1341630000	DEK 5/8-11.5 MC NE WS	B.83
1341630000	DEK 5/8-11.5 MC NE WS	B.84
1341630000	DEK 5/8-11.5 MC NE WS	B.85
1341630000	DEK 5/8-11.5 MC NE WS	B.86
1341630000	DEK 5/8-11.5 MC NE WS	B.89
1341630000	DEK 5/8-11.5 MC NE WS	B.9
1341630000	DEK 5/8-11.5 MC NE WS	B.90
1341630000	DEK 5/8-11.5 MC NE WS	B.91
1341630000	DEK 5/8-11.5 MC NE WS	B.92
1341630000	DEK 5/8-11.5 MC NE WS	B.93
1341630000	DEK 5/8-11.5 MC NE WS	B.94
1341630000	DEK 5/8-11.5 MC NE WS	B.95
1341630000	DEK 5/8-11.5 MC NE WS	B.96
1341630000	DEK 5/8-11.5 MC NE WS	B.99
1346400000	UR20-PK-1315200000-SP	B.113
1346400000	UR20-PK-1315200000-SP	B.26
1346410000	UR20-PK-1315240000-SP	B.113
1346410000	UR20-PK-1315240000-SP	B.40
1346430000	UR20-PK-1315180000-SP	B.113
1346430000	UR20-PK-1315180000-SP	B.23
1346440000	UR20-PK-1315170000-SP	B.113
1346440000	UR20-PK-1315170000-SP	B.21
1346450000	UR20-PK-1334770000-SP	B.111
1346450000	UR20-PK-1334770000-SP	B.113
1346460000	UR20-PK-1334710000-SP	B.107
1346460000	UR20-PK-1334710000-SP	B.113
1346470000	UR20-PK-1334800000-SP	B.111
1346470000	UR20-PK-1334800000-SP	B.113
1346480000	UR20-PK-1334740000-SP	B.108
1346480000	UR20-PK-1334740000-SP	B.113
1346490000	UR20-PK-1334790000-SP	B.111
1346490000	UR20-PK-1334790000-SP	B.113
1346500000	UR20-PK-1315550000-SP	B.113
1346500000	UR20-PK-1315550000-SP	B.51
1346510000	UR20-PK-1315770000-SP	B.112
1346510000	UR20-PK-1315770000-SP	B.113
1346520000	UR20-PK-1315570000-SP	B.113
1346520000	UR20-PK-1315570000-SP	B.89
1346530000	UR20-PK-1315580000-SP	B.113
1346530000	UR20-PK-1315580000-SP	B.91
1346540000	UR20-PK-1315590000-SP	B.113
1346540000	UR20-PK-1315590000-SP	B.90
1346550000	UR20-PK-1315610000-SP	B.113
1346550000	UR20-PK-1315610000-SP	B.56
1346560000	UR20-PK-1335030000-SP	B.103
1346560000	UR20-PK-1335030000-SP	B.113
1346570000	UR20-PK-1335050000-SP	B.104
1346570000	UR20-PK-1335050000-SP	B.113
1346590000	UR20-PK-1315210000-SP	B.113
1346590000	UR20-PK-1315210000-SP	B.27
1346610000	UR20-EBK-ACC	A.4
1346610000	UR20-EBK-ACC	A.5
1346610000	UR20-EBK-ACC	A.6
1346610000	UR20-EBK-ACC	B.100
1346610000	UR20-EBK-ACC	B.101
1346610000	UR20-EBK-ACC	B.102
1346610000	UR20-EBK-ACC	B.103
1346610000	UR20-EBK-ACC	B.104
1346610000	UR20-EBK-ACC	B.105
1346610000	UR20-EBK-ACC	B.107
1346610000	UR20-EBK-ACC	B.108
1346610000	UR20-EBK-ACC	B.11
1346610000	UR20-EBK-ACC	B.111
1346610000	UR20-EBK-ACC	B.112
1346610000	UR20-EBK-ACC	B.115

Order No.	Type	Page
1346610000	UR20-EBK-ACC	B.13
1346610000	UR20-EBK-ACC	B.15
1346610000	UR20-EBK-ACC	B.17
1346610000	UR20-EBK-ACC	B.19
1346610000	UR20-EBK-ACC	B.21
1346610000	UR20-EBK-ACC	B.22
1346610000	UR20-EBK-ACC	B.23
1346610000	UR20-EBK-ACC	B.24
1346610000	UR20-EBK-ACC	B.25
1346610000	UR20-EBK-ACC	B.26
1346610000	UR20-EBK-ACC	B.27
1346610000	UR20-EBK-ACC	B.28
1346610000	UR20-EBK-ACC	B.29
1346610000	UR20-EBK-ACC	B.30
1346610000	UR20-EBK-ACC	B.31
1346610000	UR20-EBK-ACC	B.32
1346610000	UR20-EBK-ACC	B.33
1346610000	UR20-EBK-ACC	B.34
1346610000	UR20-EBK-ACC	B.35
1346610000	UR20-EBK-ACC	B.37
1346610000	UR20-EBK-ACC	B.38
1346610000	UR20-EBK-ACC	B.39
1346610000	UR20-EBK-ACC	B.40
1346610000	UR20-EBK-ACC	B.41
1346610000	UR20-EBK-ACC	B.42
1346610000	UR20-EBK-ACC	B.43
1346610000	UR20-EBK-ACC	B.44
1346610000	UR20-EBK-ACC	B.45
1346610000	UR20-EBK-ACC	B.46
1346610000	UR20-EBK-ACC	B.47
1346610000	UR20-EBK-ACC	B.48
1346610000	UR20-EBK-ACC	B.49
1346610000	UR20-EBK-ACC	B.5
1346610000	UR20-EBK-ACC	B.50
1346610000	UR20-EBK-ACC	B.51
1346610000	UR20-EBK-ACC	B.53
1346610000	UR20-EBK-ACC	B.55
1346610000	UR20-EBK-ACC	B.56
1346610000	UR20-EBK-ACC	B.57
1346610000	UR20-EBK-ACC	B.59
1346610000	UR20-EBK-ACC	B.60
1346610000	UR20-EBK-ACC	B.61
1346610000	UR20-EBK-ACC	B.62
1346610000	UR20-EBK-ACC	B.63
1346610000	UR20-EBK-ACC	B.64
1346610000	UR20-EBK-ACC	B.65
1346610000	UR20-EBK-ACC	B.66
1346610000	UR20-EBK-ACC	B.67
1346610000	UR20-EBK-ACC	B.68
1346610000	UR20-EBK-ACC	B.7
1346610000	UR20-EBK-ACC	B.71
1346610000	UR20-EBK-ACC	B.72
1346610000	UR20-EBK-ACC	B.73
1346610000	UR20-EBK-ACC	B.74
1346610000	UR20-EBK-ACC	B.75
1346610000	UR20-EBK-ACC	B.77
1346610000	UR20-EBK-ACC	B.79
1346610000	UR20-EBK-ACC	B.81
1346610000	UR20-EBK-ACC	B.82
1346610000	UR20-EBK-ACC	B.83
1346610000	UR20-EBK-ACC	B.84
1346610000	UR20-EBK-ACC	B.85
1346610000	UR20-EBK-ACC	B.86
1346610000	UR20-EBK-ACC	B.89
1346610000	UR20-EBK-ACC	B.9
1346610000	UR20-EBK-ACC	B.90
1346610000	UR20-EBK-ACC	B.91
1346610000	UR20-EBK-ACC	B.92
1346610000	UR20-EBK-ACC	B.93
1346610000	UR20-EBK-ACC	B.94
1346610000	UR20-EBK-ACC	B.95
1346610000	UR20-EBK-ACC	B.96
1346610000	UR20-EBK-ACC	B.99
1346640000	UR20-EM-1315170000-SP	B.113
1346640000	UR20-EM-1315170000-SP	B.21
1346650000	UR20-EM-1394400000-SP	B.24
1346670000	UR20-EM-1315190000-SP	B.113
1346670000	UR20-EM-1315190000-SP	B.25
1346680000	UR20-EM-1315200000-SP	B.113
1346680000	UR20-EM-1315200000-SP	B.26
1346690000	UR20-EM-1315210000-SP	B.113
1346690000	UR20-EM-1315210000-SP	B.27
1346700000	UR20-EM-1315220000-SP	B.113
1346700000	UR20-EM-1315220000-SP	B.37
1346710000	UR20-EM-1315230000-SP	B.113
1346710000	UR20-EM-1315230000-SP	B.38
1346720000	UR20-EM-1315240000-SP	B.113
1346720000	UR20-EM-1315240000-SP	B.40
1346730000	UR20-EM-1315250000-SP	B.113
1346730000	UR20-EM-1315250000-SP	B.42
1346740000	UR20-EM-1315270000-SP	B.113
1346740000	UR20-EM-1315270000-SP	B.43
1346870000	UR20-EM-1315350000-SP	B.113
1346870000	UR20-EM-1315350000-SP	B.30
1346880000	UR20-EM-1315370000-SP	B.113
1346880000	UR20-EM-1315370000-SP	B.31
1346920000	UR20-EM-1315390000-SP	B.113
1346920000	UR20-EM-1315390000-SP	B.32
1346930000	UR20-EM-1315400000-SP	B.113

Order No.	Type	Page
1346930000	UR20-EM-1315400000-SP	B.33
1346940000	UR20-EM-1315410000-SP	B.113
1346940000	UR20-EM-1315410000-SP	B.44
1346950000	UR20-EM-1315420000-SP	B.113
1346950000	UR20-EM-1315420000-SP	B.45
1346970000	UR20-EM-1315430000-SP	B.113
1346970000	UR20-EM-1315430000-SP	B.46
1346980000	UR20-EM-1315440000-SP	B.113
1346980000	UR20-EM-1315440000-SP	B.47
1346990000	UR20-EM-1315450000-SP	B.113
1346990000	UR20-EM-1315450000-SP	B.48
1347120000	UR20-EM-1315540000-SP	B.113
1347120000	UR20-EM-1315540000-SP	B.50
1347130000	UR20-EM-1315550000-SP	B.113
1347130000	UR20-EM-1315550000-SP	B.51
1347140000	UR20-EM-1315570000-SP	B.113
1347140000	UR20-EM-1315570000-SP	B.89
1347150000	UR20-EM-1315590000-SP	B.113
1347150000	UR20-EM-1315590000-SP	B.90
1347170000	UR20-EM-1315580000-SP	B.113
1347170000	UR20-EM-1315580000-SP	B.91
1347180000	UR20-EM-1315600000-SP	B.113
1347180000	UR20-EM-1315600000-SP	B.55
1347190000	UR20-EM-1315610000-SP	B.113
1347190000	UR20-EM-1315610000-SP	B.56
1347200000	UR20-EM-1315620000-SP	B.113
1347200000	UR20-EM-1315620000-SP	B.60
1347240000	UR20-EM-1315650000-SP	B.113
1347240000	UR20-EM-1315650000-SP	B.64
1347250000	UR20-EM-1315670000-SP	B.113
1347250000	UR20-EM-1315670000-SP	B.66
1347270000	UR20-EM-1315680000-SP	B.113
1347270000	UR20-EM-1315680000-SP	B.81
1347280000	UR20-EM-1315690000-SP	B.113
1347280000	UR20-EM-1315690000-SP	B.61
1347290000	UR20-EM-1315700000-SP	B.113
1347290000	UR20-EM-1315700000-SP	B.71
1347320000	UR20-EM-1315720000-SP	B.113
1347320000	UR20-EM-1315720000-SP	B.65
1347330000	UR20-EM-1315730000-SP	B.113
1347330000	UR20-EM-1315730000-SP	B.83
1347340000	UR20-EM-1315740000-SP	B.113
1347340000	UR20-EM-1315740000-SP	B.96
1347350000	UR20-EM-1315750000-SP	B.113
1347350000	UR20-EM-1315750000-SP	B.94
1347370000	UR20-EM-1315770000-SP	B.112
1347370000	UR20-EM-1315770000-SP	B.113
1347380000	UR20-EM-1334710000-SP	B.107
1347380000	UR20-EM-1334710000-SP	B.113
1347420000	UR20-EM-1334740000-SP	B.108
1347420000	UR20-EM-1334740000-SP	B.113
1347450000	UR20-EM-1334770000-SP	B.111
1347450000	UR20-EM-1334770000-SP	B.113
1347470000	UR20-EM-1334780000-SP	B.111
1347470000	UR20-EM-1334780000-SP	B.113
1347480000	UR20-EM-1334790000-SP	B.111
1347480000	UR20-EM-1334790000-SP	B.113
1347490000	UR20-EM-1334800000-SP	B.111
1347490000	UR20-EM-1334800000-SP	B.113
1347500000	UR20-EM-1334810000-SP	B.111
1347500000	UR20-EM-1334810000-SP	B.113
1347520000	UR20-EM-1335030000-SP	B.103
1347520000	UR20-EM-1335030000-SP	B.113
1347530000	UR20-EM-1335040000-SP	B.105
1347530000	UR20-EM-1335040000-SP	B.113
1347540000	UR20-EM-1335050000-SP	B.104
1347540000	UR20-EM-1335050000-SP	B.113
1347550000	UR20-EM-1335060000-SP	B.113
1347570000	UR20-EM-1335070000-SP	B.113

1350000000

1350930000	UR20-BM-SP	B.100
1350930000	UR20-BM-SP	B.101
1350930000	UR20-BM-SP	B.102
1350930000	UR20-BM-SP	B.111
1350930000	UR20-BM-SP	B.112
1350930000	UR20-BM-SP	B.113
1350930000	UR20-BM-SP	B.21
1350930000	UR20-BM-SP	B.22
1350930000	UR20-BM-SP	B.23
1350930000	UR20-BM-SP	B.24
1350930000	UR20-BM-SP	B.25
1350930000	UR20-BM-SP	B.26
1350930000	UR20-BM-SP	B.27
1350930000	UR20-BM-SP	B.28
1350930000	UR20-BM-SP	B.29
1350930000	UR20-BM-SP	B.30
1350930000	UR20-BM-SP	B.31
1350930000	UR20-BM-SP	B.32
1350930000	UR20-BM-SP	B.33
1350930000	UR20-BM-SP	B.34
1350930000	UR20-BM-SP	B.35
1350930000	UR20-BM-SP	B.37
1350930000	UR20-BM-SP	B.38
1350930000	UR20-BM-SP	B.39
1350930000	UR20-BM-SP	B.40
1350930000	UR20-BM-SP	B.41
1350930000	UR20-BM-SP	B.42

Order No.	Type	Page
1350930000	UR20-BM-SP	B.43
1350930000	UR20-BM-SP	B.44
1350930000	UR20-BM-SP	B.45
1350930000	UR20-BM-SP	B.46
1350930000	UR20-BM-SP	B.47
1350930000	UR20-BM-SP	B.48
1350930000	UR20-BM-SP	B.49
1350930000	UR20-BM-SP	B.50
1350930000	UR20-BM-SP	B.51
1350930000	UR20-BM-SP	B.53
1350930000	UR20-BM-SP	B.55
1350930000	UR20-BM-SP	B.56
1350930000	UR20-BM-SP	B.57
1350930000	UR20-BM-SP	B.59
1350930000	UR20-BM-SP	B.60
1350930000	UR20-BM-SP	B.61
1350930000	UR20-BM-SP	B.62
1350930000	UR20-BM-SP	B.63
1350930000	UR20-BM-SP	B.64
1350930000	UR20-BM-SP	B.65
1350930000	UR20-BM-SP	B.66
1350930000	UR20-BM-SP	B.67
1350930000	UR20-BM-SP	B.68
1350930000	UR20-BM-SP	B.71
1350930000	UR20-BM-SP	B.72
1350930000	UR20-BM-SP	B.73
1350930000	UR20-BM-SP	B.74
1350930000	UR20-BM-SP	B.75
1350930000	UR20-BM-SP	B.77
1350930000	UR20-BM-SP	B.79
1350930000	UR20-BM-SP	B.81
1350930000	UR20-BM-SP	B.82
1350930000	UR20-BM-SP	B.83
1350930000	UR20-BM-SP	B.84
1350930000	UR20-BM-SP	B.85
1350930000	UR20-BM-SP	B.86
1350930000	UR20-BM-SP	B.89
1350930000	UR20-BM-SP	B.90
1350930000	UR20-BM-SP	B.91
1350930000	UR20-BM-SP	B.92
1350930000	UR20-BM-SP	B.93
1350930000	UR20-BM-SP	B.94
1350930000	UR20-BM-SP	B.95
1350930000	UR20-BM-SP	B.96
1350930000	UR20-BM-SP	B.99
1350940000	UR20-BM-PF-I-SP	B.107
1350940000	UR20-BM-PF-I-SP	B.113
1350950000	UR20-BM-PF-O-SP	B.108
1350950000	UR20-BM-PF-O-SP	B.113
1350970000	UR20-BM-PF-O-SIL-SP	B.103
1350970000	UR20-BM-PF-O-SIL-SP	B.104
1350970000	UR20-BM-PF-O-SIL-SP	B.105
1350970000	UR20-BM-PF-O-SIL-SP	B.113

1390000000

1394390000	UR20-4AI-UI-12	B.113
1394390000	UR20-4AI-UI-12	B.114
1394390000	UR20-4AI-UI-12	B.59
1394400000	UR20-8DI-P-3W	B.113
1394400000	UR20-8DI-P-3W	B.114
1394400000	UR20-8DI-P-3W	B.24
1394420000	UR20-4DO-PN-2A	B.113
1394420000	UR20-4DO-PN-2A	B.114
1394420000	UR20-4DO-PN-2A	B.39

1410000000

1411430000	UR20-PK-1394400000-SP	B.113
1411430000	UR20-PK-1394400000-SP	B.24

1420000000

1429420000	THM UR20 WS	A.4
1429420000	THM UR20 WS	A.5
1429420000	THM UR20 WS	A.6
1429420000	THM UR20 WS	B.100
1429420000	THM UR20 WS	B.101
1429420000	THM UR20 WS	B.102
1429420000	THM UR20 WS	B.103
1429420000	THM UR20 WS	B.104
1429420000	THM UR20 WS	B.105
1429420000	THM UR20 WS	B.107
1429420000	THM UR20 WS	B.108
1429420000	THM UR20 WS	B.11
1429420000	THM UR20 WS	B.111
1429420000	THM UR20 WS	B.112
1429420000	THM UR20 WS	B.115
1429420000	THM UR20 WS	B.13
1429420000	THM UR20 WS	B.15
1429420000	THM UR20 WS	B.17
1429420000	THM UR20 WS	B.19
1429420000	THM UR20 WS	B.22
1429420000	THM UR20 WS	B.23
1429420000	THM UR20 WS	B.24
1429420000	THM UR20 WS	B.25
1429420000	THM UR20 WS	B.26
1429420000	THM UR20 WS	B.27
1429420000	THM UR20 WS	B.28
1429420000	THM UR20 WS	B.29
1429420000	THM UR20 WS	B.30
1429420000	THM UR20 WS	B.31
1429420000	THM UR20 WS	B.32
1429420000	THM UR20 WS	B.33
1429420000	THM UR20 WS	B.34
1429420000	THM UR20 WS	B.35
1429420000	THM UR20 WS	B.37
1429420000	THM UR20 WS	B.38
1429420000	THM UR20 WS	B.39
1429420000	THM UR20 WS	B.40
1429420000	THM UR20 WS	B.41
1429420000	THM UR20 WS	B.42
1429420000	THM UR20 WS	B.43
1429420000	THM UR20 WS	B.44
1429420000	THM UR20 WS	B.45
1429420000	THM UR20 WS	B.46
1429420000	THM UR20 WS	B.47
1429420000	THM UR20 WS	B.48
1429420000	THM UR20 WS	B.50
1429420000	THM UR20 WS	B.51
1429420000	THM UR20 WS	B.55
1429420000	THM UR20 WS	B.56
1429420000	THM UR20 WS	B.59
1429420000	THM UR20 WS	B.60
1429420000	THM UR20 WS	B.61
1429420000	THM UR20 WS	B.62
1429420000	THM UR20 WS	B.63
1429420000	THM UR20 WS	B.64
1429420000	THM UR20 WS	B.65
1429420000	THM UR20 WS	B.66
1429420000	THM UR20 WS	B.67
1429420000	THM UR20 WS	B.7
1429420000	THM UR20 WS	B.71
1429420000	THM UR20 WS	B.72
1429420000	THM UR20 WS	B.73
1429420000	THM UR20 WS	B.74
1429420000	THM UR20 WS	B.75
1429420000	THM UR20 WS	B.77
1429420000	THM UR20 WS	B.79
1429420000	THM UR20 WS	B.81
1429420000	THM UR20 WS	B.82
1429420000	THM UR20 WS	B.83
1429420000	THM UR20 WS	B.84
1429420000	THM UR20 WS	B.85
1429420000	THM UR20 WS	B.86
1429420000	THM UR20 WS	B.89
1429420000	THM UR20 WS	B.9
1429420000	THM UR20 WS	B.90
1429420000	THM UR20 WS	B.91
1429420000	THM UR20 WS	B.92
1429420000	THM UR20 WS	B.93
1429420000	THM UR20 WS	B.94
1429420000	THM UR20 WS	B.95
1429420000	THM UR20 WS	B.96
1429420000	THM UR20 WS	B.99
1429430000	ESO UR20 DIN A4 WS	A.4
1429430000	ESO UR20 DIN A4 WS	A.5
1429430000	ESO UR20 DIN A4 WS	A.6
1429430000	ESO UR20 DIN A4 WS	B.100
1429430000	ESO UR20 DIN A4 WS	B.101
1429430000	ESO UR20 DIN A4 WS	B.102
1429430000	ESO UR20 DIN A4 WS	B.103
1429430000	ESO UR20 DIN A4 WS	B.104
1429430000	ESO UR20 DIN A4 WS	B.105
1429430000	ESO UR20 DIN A4 WS	B.107
1429430000	ESO UR20 DIN A4 WS	B.108
1429430000	ESO UR20 DIN A4 WS	B.11
1429430000	ESO UR20 DIN A4 WS	B.111
1429430000	ESO UR20 DIN A4 WS	B.112
1429430000	ESO UR20 DIN A4 WS	B.115
1429430000	ESO UR20 DIN A4 WS	B.13
1429430000	ESO UR20 DIN A4 WS	B.15
1429430000	ESO UR20 DIN A4 WS	B.17
1429430000	ESO UR20 DIN A4 WS	B.19
1429430000	ESO UR20 DIN A4 WS	B.22
1429430000	ESO UR20 DIN A4 WS	B.23
1429430000	ESO UR20 DIN A4 WS	B.24
1429430000	ESO UR20 DIN A4 WS	B.25
1429430000	ESO UR20 DIN A4 WS	B.26
1429430000	ESO UR20 DIN A4 WS	B.27
1429430000	ESO UR20 DIN A4 WS	B.28
1429430000	ESO UR20 DIN A4 WS	B.29
1429430000	ESO UR20 DIN A4 WS	B.30
1429430000	ESO UR20 DIN A4 WS	B.31
1429430000	ESO UR20 DIN A4 WS	B.32
1429430000	ESO UR20 DIN A4 WS	B.33
1429430000	ESO UR20 DIN A4 WS	B.34
1429430000	ESO UR20 DIN A4 WS	B.35
1429430000	ESO UR20 DIN A4 WS	B.37
1429430000	ESO UR20 DIN A4 WS	B.38
1429430000	ESO UR20 DIN A4 WS	B.39
1429430000	ESO UR20 DIN A4 WS	B.40
1429430000	ESO UR20 DIN A4 WS	B.41
1429430000	ESO UR20 DIN A4 WS	B.42
1429430000	ESO UR20 DIN A4 WS	B.43
1429430000	ESO UR20 DIN A4 WS	B.44
1429430000	ESO UR20 DIN A4 WS	B.45
1429430000	ESO UR20 DIN A4 WS	B.46

Order No.	Type	Page
1429430000	ESO UR20 DIN A4 WS	B.47
1429430000	ESO UR20 DIN A4 WS	B.48
1429430000	ESO UR20 DIN A4 WS	B.50
1429430000	ESO UR20 DIN A4 WS	B.51
1429430000	ESO UR20 DIN A4 WS	B.55
1429430000	ESO UR20 DIN A4 WS	B.56
1429430000	ESO UR20 DIN A4 WS	B.59
1429430000	ESO UR20 DIN A4 WS	B.60
1429430000	ESO UR20 DIN A4 WS	B.61
1429430000	ESO UR20 DIN A4 WS	B.62
1429430000	ESO UR20 DIN A4 WS	B.63
1429430000	ESO UR20 DIN A4 WS	B.64
1429430000	ESO UR20 DIN A4 WS	B.65
1429430000	ESO UR20 DIN A4 WS	B.66
1429430000	ESO UR20 DIN A4 WS	B.67
1429430000	ESO UR20 DIN A4 WS	B.7
1429430000	ESO UR20 DIN A4 WS	B.71
1429430000	ESO UR20 DIN A4 WS	B.72
1429430000	ESO UR20 DIN A4 WS	B.73
1429430000	ESO UR20 DIN A4 WS	B.74
1429430000	ESO UR20 DIN A4 WS	B.75
1429430000	ESO UR20 DIN A4 WS	B.77
1429430000	ESO UR20 DIN A4 WS	B.79
1429430000	ESO UR20 DIN A4 WS	B.81
1429430000	ESO UR20 DIN A4 WS	B.82
1429430000	ESO UR20 DIN A4 WS	B.83
1429430000	ESO UR20 DIN A4 WS	B.84
1429430000	ESO UR20 DIN A4 WS	B.85
1429430000	ESO UR20 DIN A4 WS	B.86
1429430000	ESO UR20 DIN A4 WS	B.89
1429430000	ESO UR20 DIN A4 WS	B.9
1429430000	ESO UR20 DIN A4 WS	B.90
1429430000	ESO UR20 DIN A4 WS	B.91
1429430000	ESO UR20 DIN A4 WS	B.92
1429430000	ESO UR20 DIN A4 WS	B.93
1429430000	ESO UR20 DIN A4 WS	B.94
1429430000	ESO UR20 DIN A4 WS	B.95
1429430000	ESO UR20 DIN A4 WS	B.96
1429430000	ESO UR20 DIN A4 WS	B.99
1429910000	THM UR20 GE	A.4
1429910000	THM UR20 GE	A.5
1429910000	THM UR20 GE	A.6
1429910000	THM UR20 GE	B.100
1429910000	THM UR20 GE	B.101
1429910000	THM UR20 GE	B.102
1429910000	THM UR20 GE	B.103
1429910000	THM UR20 GE	B.104
1429910000	THM UR20 GE	B.105
1429910000	THM UR20 GE	B.107
1429910000	THM UR20 GE	B.108
1429910000	THM UR20 GE	B.11
1429910000	THM UR20 GE	B.111
1429910000	THM UR20 GE	B.112
1429910000	THM UR20 GE	B.115
1429910000	THM UR20 GE	B.13
1429910000	THM UR20 GE	B.15
1429910000	THM UR20 GE	B.17
1429910000	THM UR20 GE	B.19
1429910000	THM UR20 GE	B.22
1429910000	THM UR20 GE	B.23
1429910000	THM UR20 GE	B.24
1429910000	THM UR20 GE	B.25
1429910000	THM UR20 GE	B.26
1429910000	THM UR20 GE	B.27
1429910000	THM UR20 GE	B.28
1429910000	THM UR20 GE	B.29
1429910000	THM UR20 GE	B.30
1429910000	THM UR20 GE	B.31
1429910000	THM UR20 GE	B.32
1429910000	THM UR20 GE	B.33
1429910000	THM UR20 GE	B.34
1429910000	THM UR20 GE	B.35
1429910000	THM UR20 GE	B.37
1429910000	THM UR20 GE	B.38
1429910000	THM UR20 GE	B.39
1429910000	THM UR20 GE	B.40
1429910000	THM UR20 GE	B.41
1429910000	THM UR20 GE	B.42
1429910000	THM UR20 GE	B.43
1429910000	THM UR20 GE	B.44
1429910000	THM UR20 GE	B.45
1429910000	THM UR20 GE	B.46
1429910000	THM UR20 GE	B.47
1429910000	THM UR20 GE	B.48
1429910000	THM UR20 GE	B.50
1429910000	THM UR20 GE	B.51
1429910000	THM UR20 GE	B.55
1429910000	THM UR20 GE	B.56
1429910000	THM UR20 GE	B.59
1429910000	THM UR20 GE	B.60
1429910000	THM UR20 GE	B.61
1429910000	THM UR20 GE	B.62
1429910000	THM UR20 GE	B.63
1429910000	THM UR20 GE	B.64
1429910000	THM UR20 GE	B.65
1429910000	THM UR20 GE	B.66
1429910000	THM UR20 GE	B.67
1429910000	THM UR20 GE	B.7
1429910000	THM UR20 GE	B.71

Order No.	Type	Page
1429910000	THM UR20 GE	B.72
1429910000	THM UR20 GE	B.73
1429910000	THM UR20 GE	B.74
1429910000	THM UR20 GE	B.75
1429910000	THM UR20 GE	B.77
1429910000	THM UR20 GE	B.79
1429910000	THM UR20 GE	B.81
1429910000	THM UR20 GE	B.82
1429910000	THM UR20 GE	B.83
1429910000	THM UR20 GE	B.84
1429910000	THM UR20 GE	B.85
1429910000	THM UR20 GE	B.86
1429910000	THM UR20 GE	B.89
1429910000	THM UR20 GE	B.9
1429910000	THM UR20 GE	B.90
1429910000	THM UR20 GE	B.91
1429910000	THM UR20 GE	B.92
1429910000	THM UR20 GE	B.93
1429910000	THM UR20 GE	B.94
1429910000	THM UR20 GE	B.95
1429910000	THM UR20 GE	B.96
1429910000	THM UR20 GE	B.99

1430000000

1434220000	UR20-EM-1394400000-SP	B.113
1434230000	UR20-EM-1394390000-SP	B.113
1434230000	UR20-EM-1394390000-SP	B.59
1435740000	UR20-EM-1315710000-SP	B.113
1435740000	UR20-EM-1315710000-SP	B.74

1460000000

1460140000	UR20-2DI-P-TS	B.113
1460140000	UR20-2DI-P-TS	B.114
1460140000	UR20-2DI-P-TS	B.28
1460150000	UR20-4DI-P-TS	B.113
1460150000	UR20-4DI-P-TS	B.114
1460150000	UR20-4DI-P-TS	B.29
1463680000	UR20-EM-1460150000-SP	B.113
1463680000	UR20-EM-1460150000-SP	B.29
1463690000	UR20-EM-1460140000-SP	B.113
1463690000	UR20-EM-1460140000-SP	B.28
1469340000	UR20-PG0.35	B.25
1469340000	UR20-PG0.35	B.41
1469340000	UR20-PG0.35	B.62
1469340000	UR20-PG0.35	B.63
1469340000	UR20-PG0.35	B.64
1469340000	UR20-PG0.35	B.65
1469340000	UR20-PG0.35	B.85
1469340000	UR20-PG0.35	B.86

1470000000

1475030150	SAIL-URZM12G-C-1.5U	C.33
1475040150	SAIL-URZM12W-C-1.5U	C.33
1475050150	SAIL-URZM8G-3-1.5U	C.33
1475060150	SAIL-URZM8W-3-1.5U	C.33
1475070150	SAIL-URPM12G-C-1.5U	C.33
1475080150	SAIL-URPM12W-C-1.5U	C.33
1475090150	SAIL-URPM12G-O-1.5U	C.33
1475120150	SAIL-URPM12W-O-1.5U	C.33
1475130150	SAIL-URPM12G-4-1.5U	C.33
1475140150	SAIL-URPM12W-4-1.5U	C.33
1475160150	SAIL-URPM8G-3-1.5U	C.33
1475170150	SAIL-URPM8W-3-1.5U	C.33
1475280150	SAIL-URPM12G-C-1.5V	C.33
1475290150	SAIL-URPM12W-C-1.5V	C.33
1475300150	SAIL-URPM12G-O-1.5V	C.33
1475310150	SAIL-URPM12W-O-1.5V	C.33
1475320150	SAIL-URPM12G-4-1.5V	C.33
1475330150	SAIL-URPM12W-4-1.5V	C.33
1475340150	SAIL-URPM8G-C-1.5V	C.33
1475350150	SAIL-URPM8W-C-1.5V	C.33
1475450150	SAIL-URPM12W-2L-1.5U	C.33
1475470150	SAIL-URPM8W-2L-1.5U	C.33
1475500150	SAIL-URPM12W-2L-1.5V	C.33
1475510150	SAIL-URPM8W-2L-1.5V	C.33

1480000000

1480950000	UR20-EM-1394420000-SP	B.113
1480950000	UR20-EM-1394420000-SP	B.39
1483050000	KOSM BHZ5.00	A.4
1483050000	KOSM BHZ5.00	A.5
1483050000	KOSM BHZ5.00	A.6
1483050000	KOSM BHZ5.00	B.100
1483050000	KOSM BHZ5.00	B.101
1483050000	KOSM BHZ5.00	B.102
1483050000	KOSM BHZ5.00	B.103
1483050000	KOSM BHZ5.00	B.104
1483050000	KOSM BHZ5.00	B.105
1483050000	KOSM BHZ5.00	B.107
1483050000	KOSM BHZ5.00	B.108
1483050000	KOSM BHZ5.00	B.11
1483050000	KOSM BHZ5.00	B.111
1483050000	KOSM BHZ5.00	B.112
1483050000	KOSM BHZ5.00	B.13
1483050000	KOSM BHZ5.00	B.15

Order No.	Type	Page
1483050000	KOSM BHZ5.00	B.17
1483050000	KOSM BHZ5.00	B.19
1483050000	KOSM BHZ5.00	B.22
1483050000	KOSM BHZ5.00	B.23
1483050000	KOSM BHZ5.00	B.24
1483050000	KOSM BHZ5.00	B.25
1483050000	KOSM BHZ5.00	B.26
1483050000	KOSM BHZ5.00	B.27
1483050000	KOSM BHZ5.00	B.28
1483050000	KOSM BHZ5.00	B.29
1483050000	KOSM BHZ5.00	B.30
1483050000	KOSM BHZ5.00	B.31
1483050000	KOSM BHZ5.00	B.32
1483050000	KOSM BHZ5.00	B.33
1483050000	KOSM BHZ5.00	B.34
1483050000	KOSM BHZ5.00	B.35
1483050000	KOSM BHZ5.00	B.37
1483050000	KOSM BHZ5.00	B.38
1483050000	KOSM BHZ5.00	B.39
1483050000	KOSM BHZ5.00	B.40
1483050000	KOSM BHZ5.00	B.41
1483050000	KOSM BHZ5.00	B.42
1483050000	KOSM BHZ5.00	B.43
1483050000	KOSM BHZ5.00	B.44
1483050000	KOSM BHZ5.00	B.45
1483050000	KOSM BHZ5.00	B.46
1483050000	KOSM BHZ5.00	B.47
1483050000	KOSM BHZ5.00	B.48
1483050000	KOSM BHZ5.00	B.50
1483050000	KOSM BHZ5.00	B.51
1483050000	KOSM BHZ5.00	B.55
1483050000	KOSM BHZ5.00	B.56
1483050000	KOSM BHZ5.00	B.59
1483050000	KOSM BHZ5.00	B.60
1483050000	KOSM BHZ5.00	B.61
1483050000	KOSM BHZ5.00	B.62
1483050000	KOSM BHZ5.00	B.63
1483050000	KOSM BHZ5.00	B.64
1483050000	KOSM BHZ5.00	B.65
1483050000	KOSM BHZ5.00	B.66
1483050000	KOSM BHZ5.00	B.67
1483050000	KOSM BHZ5.00	B.7
1483050000	KOSM BHZ5.00	B.71
1483050000	KOSM BHZ5.00	B.72
1483050000	KOSM BHZ5.00	B.73
1483050000	KOSM BHZ5.00	B.74
1483050000	KOSM BHZ5.00	B.75
1483050000	KOSM BHZ5.00	B.77
1483050000	KOSM BHZ5.00	B.79
1483050000	KOSM BHZ5.00	B.81
1483050000	KOSM BHZ5.00	B.82
1483050000	KOSM BHZ5.00	B.83
1483050000	KOSM BHZ5.00	B.84
1483050000	KOSM BHZ5.00	B.85
1483050000	KOSM BHZ5.00	B.86
1483050000	KOSM BHZ5.00	B.89
1483050000	KOSM BHZ5.00	B.9
1483050000	KOSM BHZ5.00	B.90
1483050000	KOSM BHZ5.00	B.91
1483050000	KOSM BHZ5.00	B.92
1483050000	KOSM BHZ5.00	B.93
1483050000	KOSM BHZ5.00	B.94
1483050000	KOSM BHZ5.00	B.95
1483050000	KOSM BHZ5.00	B.96
1483050000	KOSM BHZ5.00	B.99
1483940000	UR20-PK-1315270000-SP	B.113
1483940000	UR20-PK-1315270000-SP	B.43
1483950000	UR20-PK-1315670000-SP	B.113
1483950000	UR20-PK-1315670000-SP	B.66
1483960000	UR20-PK-1315220000-SP	B.113
1483960000	UR20-PK-1315220000-SP	B.37
1483970000	UR20-PK-1315230000-SP	B.113
1483970000	UR20-PK-1315230000-SP	B.38
1483980000	UR20-PK-1394420000-SP	B.113
1483980000	UR20-PK-1394420000-SP	B.39
1483990000	UR20-PK-1315250000-SP	B.113
1483990000	UR20-PK-1315250000-SP	B.42
1484000000	UR20-PK-1315540000-SP	B.113
1484000000	UR20-PK-1315540000-SP	B.50
1484010000	UR20-PK-1315600000-SP	B.113
1484010000	UR20-PK-1315600000-SP	B.55
1484020000	UR20-PK-1315620000-SP	B.113
1484020000	UR20-PK-1315620000-SP	B.60
1484030000	UR20-PK-1394390000-SP	B.113
1484030000	UR20-PK-1394390000-SP	B.59
1484040000	UR20-PK-1315700000-SP	B.113
1484040000	UR20-PK-1315700000-SP	B.71
1484050000	UR20-PK-1315710000-SP	B.113
1484050000	UR20-PK-1315710000-SP	B.74
1484070000	UR20-PK-1315680000-SP	B.113
1484070000	UR20-PK-1315680000-SP	B.81
1484080000	UR20-PK-1334780000-SP	B.111
1484080000	UR20-PK-1334780000-SP	B.113
1484090000	UR20-PK-1334810000-SP	B.111
1484090000	UR20-PK-1334810000-SP	B.113
1484100000	UR20-PK-1335040000-SP	B.105
1484100000	UR20-PK-1335040000-SP	B.113
1484110000	UR20-PK-1460140000-SP	B.113
1484110000	UR20-PK-1460140000-SP	B.28

Order No.	Type	Page
1484430000	UR20-PK-1460150000-SP	B.113
1484430000	UR20-PK-1460150000-SP	B.29
1484440000	UR20-PK-1334910000-SP	B.113
1484440000	UR20-PK-1334910000-SP	B.9
1487980000	IE-USB-A-MICRO-1.8M	A.4
1487980000	IE-USB-A-MICRO-1.8M	A.5
1487980000	IE-USB-A-MICRO-1.8M	A.6
1487980000	IE-USB-A-MICRO-1.8M	B.11
1487980000	IE-USB-A-MICRO-1.8M	B.111
1487980000	IE-USB-A-MICRO-1.8M	B.13
1487980000	IE-USB-A-MICRO-1.8M	B.15
1487980000	IE-USB-A-MICRO-1.8M	B.17
1487980000	IE-USB-A-MICRO-1.8M	B.19
1487980000	IE-USB-A-MICRO-1.8M	B.5
1487980000	IE-USB-A-MICRO-1.8M	B.7
1487980000	IE-USB-A-MICRO-1.8M	B.9

1490000000

1490220000	UR20-EM-1315180000-SP	B.113
1490220000	UR20-EM-1315180000-SP	B.23

1500000000

1506910000	UR20-4AI-UI-16-DIAG-HD	B.113
1506910000	UR20-4AI-UI-16-DIAG-HD	B.114
1506910000	UR20-4AI-UI-16-DIAG-HD	B.63
1506920000	UR20-4AI-UI-16-HD	B.113
1506920000	UR20-4AI-UI-16-HD	B.114
1506920000	UR20-4AI-UI-16-HD	B.62
1506930000	UR20-4AO-UI-16-DIAG-HD	B.113
1506930000	UR20-4AO-UI-16-DIAG-HD	B.114
1506930000	UR20-4AO-UI-16-DIAG-HD	B.86
1508080000	UR20-2FCNT-100	B.113
1508080000	UR20-2FCNT-100	B.114
1508080000	UR20-2FCNT-100	B.92
1508090000	UR20-1SSI	B.113
1508090000	UR20-1SSI	B.114
1508090000	UR20-1SSI	B.93
1509830000	UR20-8DO-P-2W-HD	B.113
1509830000	UR20-8DO-P-2W-HD	B.114
1509830000	UR20-8DO-P-2W-HD	B.41

1510000000

1510690000	UR20-4AO-UI-16-HD	B.113
1510690000	UR20-4AO-UI-16-HD	B.114
1510690000	UR20-4AO-UI-16-HD	B.85
1515420000	UR20-EM-1506920000-SP	B.113
1515420000	UR20-EM-1506920000-SP	B.62
1515430000	UR20-EM-1506910000-SP	B.113
1515430000	UR20-EM-1506910000-SP	B.63
1515440000	UR20-EM-1508080000-SP	B.113
1515440000	UR20-EM-1508080000-SP	B.92
1515450000	UR20-EM-1509830000-SP	B.113
1515450000	UR20-EM-1509830000-SP	B.41
1515470000	UR20-EM-1510690000-SP	B.113
1515470000	UR20-EM-1510690000-SP	B.85
1515480000	UR20-EM-1506930000-SP	B.113
1515480000	UR20-EM-1506930000-SP	B.86
1515490000	UR20-EM-1508090000-SP	B.113
1515490000	UR20-EM-1508090000-SP	B.93
1518800000	UR20-PK-1315190000-SP	B.113
1518800000	UR20-PK-1315190000-SP	B.25
1518820000	UR20-PK-1506910000-SP	B.113
1518820000	UR20-PK-1506910000-SP	B.63
1518830000	UR20-PK-1506920000-SP	B.113
1518830000	UR20-PK-1506920000-SP	B.62
1518840000	UR20-PK-1508080000-SP	B.113
1518840000	UR20-PK-1508080000-SP	B.92
1518870000	UR20-PK-1315690000-SP	B.113
1518870000	UR20-PK-1315690000-SP	B.61
1518880000	UR20-PK-1315730000-SP	B.113
1518880000	UR20-PK-1315730000-SP	B.83

1520000000

1525820000	PWZ-UR20-HD	B.25
1525820000	PWZ-UR20-HD	B.41
1525820000	PWZ-UR20-HD	B.62
1525820000	PWZ-UR20-HD	B.63
1525820000	PWZ-UR20-HD	B.64
1525820000	PWZ-UR20-HD	B.65
1525820000	PWZ-UR20-HD	B.85
1525820000	PWZ-UR20-HD	B.86

1530000000

1531810000	UR20-PK-1506930000-SP	B.113
1531810000	UR20-PK-1506930000-SP	B.86
1531830000	UR20-PK-1510690000-SP	B.113
1531830000	UR20-PK-1510690000-SP	B.85

1540000000

1541290000	UR20-PK-1334920000-SP	B.113
1541290000	UR20-PK-1334920000-SP	B.13

Order No.	Type	Page
1550070000	UR20-4DI-2W-230V-AC	B.113
1550070000	UR20-4DI-2W-230V-AC	B.114
1550070000	UR20-4DI-2W-230V-AC	B.35
1558880000	UR20-EM-1550070000-SP	B.113
1558880000	UR20-EM-1550070000-SP	B.35
1559720000	UR20-PK-1509830000-SP	B.113
1559720000	UR20-PK-1509830000-SP	B.41
1559740000	UR20-PK-1315650000-SP	B.113
1559740000	UR20-PK-1315650000-SP	B.64
1559750000	UR20-PK-1315720000-SP	B.113
1559750000	UR20-PK-1315720000-SP	B.65
1559770000	UR20-PK-1315350000-SP	B.113
1559770000	UR20-PK-1315350000-SP	B.30
1559780000	UR20-PK-1315370000-SP	B.113
1559780000	UR20-PK-1315370000-SP	B.31
1559790000	UR20-PK-1315390000-SP	B.113
1559790000	UR20-PK-1315390000-SP	B.32
1559800000	UR20-PK-1315400000-SP	B.113
1559800000	UR20-PK-1315400000-SP	B.33
1559820000	UR20-PK-1550070000-SP	B.113
1559820000	UR20-PK-1550070000-SP	B.35
1559840000	UR20-PK-1315410000-SP	B.113
1559840000	UR20-PK-1315410000-SP	B.44
1559850000	UR20-PK-1315420000-SP	B.113
1559850000	UR20-PK-1315420000-SP	B.45
1559870000	UR20-PK-1508090000-SP	B.113
1559870000	UR20-PK-1508090000-SP	B.93

1560000000

1562260000	UR20-EM-1990070000-SP	B.113
1562260000	UR20-EM-1990070000-SP	B.77
1562270000	UR20-EM-2007420000-SP	B.113
1562270000	UR20-EM-2007420000-SP	B.79

1600000000

1609940000	ESG 9/20 MC NE WS	C.14

1710000000

1718431044	TM-I 18 MC NE WS	C.34
1718431044	TM-I 18 MC NE WS	C.35
1718431044	TM-I 18 MC NE WS	C.36
1718431687	TM-I 18 MC NE GE	C.34
1718431687	TM-I 18 MC NE GE	C.35
1718431687	TM-I 18 MC NE GE	C.36

1780000000

1784740000	SAIS-M-5/8S M12 5P A-COD	C.19
1784740000	SAIS-M-5/8S M12 5P A-COD	C.20
1784740000	SAIS-M-5/8S M12 5P A-COD	C.21
1784740000	SAIS-M-5/8S M12 5P A-COD	C.22
1784750000	SAIB-M-5/8S M12 5P A-COD	C.19
1784750000	SAIB-M-5/8S M12 5P A-COD	C.20
1784750000	SAIB-M-5/8S M12 5P A-COD	C.21
1784750000	SAIB-M-5/8S M12 5P A-COD	C.22
1784760000	SAIEND CAN-M12 5P A-COD	C.19
1784760000	SAIEND CAN-M12 5P A-COD	C.20
1784760000	SAIEND CAN-M12 5P A-COD	C.21
1784760000	SAIEND CAN-M12 5P A-COD	C.22

1800000000

1802760000	SAI-SK M8	C.19
1802760000	SAI-SK M8	C.20
1802760000	SAI-SK M8	C.21
1802760000	SAI-SK M8	C.22
1802760000	SAI-SK M8	C.26
1802760000	SAI-SK M8	C.27
1802760000	SAI-SK M8	C.28
1802760000	SAI-SK M8	C.29
1802760000	SAI-SK M8	C.30

1820000000

1824590150	SAIL-M8G-3-1.5U	C.13

1850000000

1857550150	SAIL-M8W-3-1.5U	C.13

1890000000

1892120000	SAISM-4/8S-M12-4P D-COD	C.4
1892120000	SAISM-4/8S-M12-4P D-COD	C.5
1892120000	SAISM-4/8S-M12-4P D-COD	C.6

1900000000

1900001000	Screwty-M12-DM	C.34
1900001000	Screwty-M12-DM	C.35
1900001000	Screwty-M12-DM	C.36
1906400150	SAIL-M8BW-4L1.5U	C.36
1906650000	SAI-AU M12 CAN 16DI	C.19
1906650000	SAI-AU M12 CAN 16DI	C.38

Order No.	Type	Page
1906660000	SAI-AU M12 CAN 16DI/8DO	C.19
1906660000	SAI-AU M12 CAN 16DI/8DO	C.38
1906670000	SAI-AU M12 CAN AI/AO/DI	C.20
1906670000	SAI-AU M12 CAN AI/AO/DI	C.38
1906680000	SAI-AU M8 CAN 16DI	C.19
1906680000	SAI-AU M8 CAN 16DI	C.38
1906690000	SAI-AU M8 CAN 16DI/8DO	C.19
1906690000	SAI-AU M8 CAN 16DI/8DO	C.38
1906700000	SAI-AU M12 DN 16DI	C.21
1906700000	SAI-AU M12 DN 16DI	C.38
1906710000	SAI-AU M12 DN 16DI/8DO	C.21
1906710000	SAI-AU M12 DN 16DI/8DO	C.38
1906720000	SAI-AU M12 DN AI/AO/DI	C.22
1906720000	SAI-AU M12 DN AI/AO/DI	C.38
1906730000	SAI-AU M8 DN 16DI	C.21
1906730000	SAI-AU M8 DN 16DI	C.38
1906740000	SAI-AU M8 DN 16DI/8DO	C.21
1906740000	SAI-AU M8 DN 16DI/8DO	C.38

1910000000

1912130000	ESG 8/13.5/43.3 SAI AU	C.19
1912130000	ESG 8/13.5/43.3 SAI AU	C.20
1912130000	ESG 8/13.5/43.3 SAI AU	C.21
1912130000	ESG 8/13.5/43.3 SAI AU	C.22
1912130000	ESG 8/13.5/43.3 SAI AU	C.25
1912130000	ESG 8/13.5/43.3 SAI AU	C.26
1912130000	ESG 8/13.5/43.3 SAI AU	C.27
1912130000	ESG 8/13.5/43.3 SAI AU	C.28
1912130000	ESG 8/13.5/43.3 SAI AU	C.29
1912130000	ESG 8/13.5/43.3 SAI AU	C.30
1919940000	ESG 5/10 MC NE WS	C.13
1919990000	BLDZ DN5.08/05/180F GY BX PRT	B.15

1920000000

1920000000	SCREWTY SET -DM	C.33
1920000000	SCREWTY SET -DM	C.37
1925460150	SAIL-M12BW-3L1.5V	C.36
1925470150	SAIL-M12BW-4-2L1.5V	C.36
1925570150	SAIL-M12BG-3-1.5V	C.34
1925580150	SAIL-M12BG-4-1.5V	C.34
1925630150	SAIL-M12BW-3-1.5V	C.34
1925640150	SAIL-M12BW-4-1.5V	C.34
1927240150	SAIL-M8BG-3-1.5V	C.35
1927260150	SAIL-M8BG-4-1.5V	C.35
1927320150	SAIL-M8BW-3-1.5V	C.35
1927340150	SAIL-M8BW-4-1.5V	C.35
1927350150	SAIL-M8BW-3L1.5V	C.36
1927360150	SAIL-M8BW-4L1.5V	C.36

1930000000

1933550000	BLZ DN 5.08/05/180F AU GY BX PRT	B.15
1938570000	SAI-AU M12 DN GW 16DI	C.25
1938570000	SAI-AU M12 DN GW 16DI	C.38
1938600000	SAI-AU M8 SB 8DI	C.26
1938600000	SAI-AU M8 SB 8DI	C.38
1938610000	SAI-AU M12 SB 8DI	C.26
1938610000	SAI-AU M12 SB 8DI	C.38
1938630000	SAI-AU M8 SB 8DIO	C.26
1938630000	SAI-AU M8 SB 8DIO	C.38
1938640000	SAI-AU M12 SB 8DIO	C.26
1938640000	SAI-AU M12 SB 8DIO	C.38
1938660000	SAI-AU M8 SB 8DO 2A	C.26
1938660000	SAI-AU M8 SB 8DO 2A	C.38
1938680000	SAI-AU M12 SB 8DO 2A	C.26
1938680000	SAI-AU M12 SB 8DO 2A	C.38
1938690000	SAI-AU M12 SB 4AI	C.27
1938690000	SAI-AU M12 SB 4AI	C.38
1938700000	SAI-AU M12 SB 4AO	C.27
1938700000	SAI-AU M12 SB 4AO	C.38
1938710000	SAI-AU M12 SB 4PT100	C.30
1938710000	SAI-AU M12 SB 4PT100	C.38
1938720000	SAI-AU M12 SB 4Thermo	C.29
1938720000	SAI-AU M12 SB 4Thermo	C.38
1938730000	SAI-AU M12 SB 2Counter	C.28
1938730000	SAI-AU M12 SB 2Counter	C.38
1939180000	SAI-SCREWTY BOX	C.34
1939180000	SAI-SCREWTY BOX	C.35
1939180000	SAI-SCREWTY BOX	C.36

1950000000

1954050000	MF 5/10 MC NE WS	C.4

1960000000

1968560150	SAIL-M12BW-3-1.5T	C.34
1968570150	SAIL-M12BW-4-1.5T	C.34
1968580150	SAIL-M12BG-4-1.5T	C.34
1968590150	SAIL-M12BG-3-1.5T	C.34

1980000000

1984770000	UR20-PK-1315430000-SP	B.113
1984770000	UR20-PK-1315430000-SP	B.46

Order No.	Type	Page

1990000000

1990070000	UR20-2AI-SG-24-DIAG	B.113
1990070000	UR20-2AI-SG-24-DIAG	B.114
1990070000	UR20-2AI-SG-24-DIAG	B.77
1992940000	UR20-PK-1335060000-SP	B.113
1992950000	UR20-PK-1335070000-SP	B.113
1992960000	UR20-PK-1529780000-SP	B.113
1992970000	UR20-PK-1529800000-SP	B.113
1993030000	UR20-EM-1529780000-SP	B.113
1993040000	UR20-EM-1529800000-SP	B.113
1993880000	UR20-4AI-UI-DIF-16-DIAG	B.113
1993880000	UR20-4AI-UI-DIF-16-DIAG	B.114
1993880000	UR20-4AI-UI-DIF-16-DIAG	B.67

2000000000

2000520000	UR20-PK-1315440000-SP	B.113
2000520000	UR20-PK-1315440000-SP	B.47
2000540000	UR20-PK-1315450000-SP	B.113
2000540000	UR20-PK-1315450000-SP	B.48
2001670000	UR20-4AI-R-HS-16-DIAG	B.113
2001670000	UR20-4AI-R-HS-16-DIAG	B.114
2001670000	UR20-4AI-R-HS-16-DIAG	B.75
2003530000	UR20-PK-1334890000-SP	B.113
2003530000	UR20-PK-1334890000-SP	B.17
2003540000	UR20-PK-1334900000-SP	B.113
2003540000	UR20-PK-1334900000-SP	B.15
2007420000	UR20-3EM-230V-AC	B.113
2007420000	UR20-3EM-230V-AC	B.114
2007420000	UR20-3EM-230V-AC	B.79
2007430000	UR20-1COM-SAI-PRO	B.113
2007430000	UR20-1COM-SAI-PRO	B.114
2007430000	UR20-1COM-SAI-PRO	B.95
2009360000	UR20-4DI-P-3W	B.113
2009360000	UR20-4DI-P-3W	B.114
2009360000	UR20-4DI-P-3W	B.22

2010000000

2011240000	UR20-PK-2009360000-SP	B.113
2011240000	UR20-PK-2009360000-SP	B.22
2011260000	UR20-EM-2009360000-SP	B.113
2011260000	UR20-EM-2009360000-SP	B.22

2060000000

2068610000	UR20-PK-2001670000-SP	B.113
2068610000	UR20-PK-2001670000-SP	B.75
2068620000	UR20-PK-1990070000-SP	B.113
2068620000	UR20-PK-1990070000-SP	B.77
2068630000	UR20-PK-2007420000-SP	B.113
2068630000	UR20-PK-2007420000-SP	B.79
2068640000	UR20-EM-2001670000-SP	B.113
2068640000	UR20-EM-2001670000-SP	B.75

2330000000

2330260000	SAI-SK-M12-UNI 2029	C.19
2330260000	SAI-SK-M12-UNI 2029	C.20
2330260000	SAI-SK-M12-UNI 2029	C.21
2330260000	SAI-SK-M12-UNI 2029	C.22
2330260000	SAI-SK-M12-UNI 2029	C.25
2330260000	SAI-SK-M12-UNI 2029	C.26
2330260000	SAI-SK-M12-UNI 2029	C.27
2330260000	SAI-SK-M12-UNI 2029	C.28
2330260000	SAI-SK-M12-UNI 2029	C.29
2330260000	SAI-SK-M12-UNI 2029	C.30

2420000000

2425150000	UR20-PK-1315750000-SP	B.113
2425150000	UR20-PK-1315750000-SP	B.94
2425160000	UR20-PK-2007430000-SP	B.113
2425160000	UR20-PK-2007430000-SP	B.95
2425170000	UR20-PK-1334940000-SP	B.113
2425170000	UR20-PK-1334940000-SP	B.19
2425350000	UR20-EM-200743000-SP	B.113
2425350000	UR20-EM-200743000-SP	B.95
2426250000	UR67-PN-HP-8IOL-12-30M	C.38
2426250000	UR67-PN-HP-8IOL-12-30M	C.4
2426260000	UR67-PN-HP-8IOL-12-60M	C.38
2426260000	UR67-PN-HP-8IOL-12-60M	C.4
2426270000	UR67-MP-HP-16DI-12-60M	C.38
2426270000	UR67-MP-HP-16DI-12-60M	C.5
2426280000	UR67-MP-HP-16DO-12-60M	C.38
2426280000	UR67-MP-HP-16DO-12-60M	C.5
2426290000	UR67-MP-HP-8DIDO-12-60M	C.38
2426290000	UR67-MP-HP-8DIDO-12-60M	C.6
2426300000	UR67-MP-78-16DI-12-60M	C.38
2426300000	UR67-MP-78-16DI-12-60M	C.7
2426310000	UR67-MP-78-16DO-12-60M	C.38
2426310000	UR67-MP-78-16DO-12-60M	C.7
2426320000	UR67-MP-78-8DIDO-12-60M	C.38
2426320000	UR67-MP-78-8DIDO-12-60M	C.8
2426330000	UR67-PB-12-8DIO-8-30K	C.13
2426330000	UR67-PB-12-8DIO-8-30K	C.38
2426340000	UR67-PB-78-16DIO-12-60K	C.14
2426340000	UR67-PB-78-16DIO-12-60K	C.38

Order No.	Type	Page
2426360000	UR67-PB-12-8DI-8-30K	C.13
2426360000	UR67-PB-12-8DI-8-30K	C.38
2426370000	UR67-PB-78-16DI-12-60K	C.14
2426370000	UR67-PB-78-16DI-12-60K	C.38
2426380000	UR67-PB-78-8DIDO-12-60M	C.16
2426380000	UR67-PB-78-8DIDO-12-60M	C.38
2426390000	UR67-PB-78-16DI-12-60M	C.15
2426390000	UR67-PB-78-16DI-12-60M	C.38
2426400000	UR67-PB-78-16DO-12-60M	C.15
2426400000	UR67-PB-78-16DO-12-60M	C.38

2440000000

2446190000	UR20-EM-1993880000-SP	B.113
2446190000	UR20-EM-1993880000-SP	B.67
2446200000	UR20-PK-1993880000-SP	B.113
2446200000	UR20-PK-1993880000-SP	B.67

2450000000

2453870000	UR20-4AO-UI-16-M-DIAG	B.113
2453870000	UR20-4AO-UI-16-M-DIAG	B.114
2453870000	UR20-4AO-UI-16-M-DIAG	B.84
2453880000	UR20-4AO-UI-16-M	B.113
2453880000	UR20-4AO-UI-16-M	B.114
2453880000	UR20-4AO-UI-16-M	B.82
2456530000	UR20-8DIO-P-3W-DIAG	B.113
2456530000	UR20-8DIO-P-3W-DIAG	B.114
2456530000	UR20-8DIO-P-3W-DIAG	B.53
2456540000	UR20-4AI-RTD-HP-DIAG	B.113
2456540000	UR20-4AI-RTD-HP-DIAG	B.114
2456540000	UR20-4AI-RTD-HP-DIAG	B.72
2457240000	UR20-8DI-ISO-2W	B.113
2457240000	UR20-8DI-ISO-2W	B.114
2457240000	UR20-8DI-ISO-2W	B.34
2457250000	UR20-4DO-ISO-4A	B.113
2457250000	UR20-4DO-ISO-4A	B.114
2457250000	UR20-4DO-ISO-4A	B.49

2460000000

2464570000	UR20-4DI-4DO-PN-FSPS-V2	B.101
2464570000	UR20-4DI-4DO-PN-FSPS-V2	B.113
2464570000	UR20-4DI-4DO-PN-FSPS-V2	B.114
2464580000	UR20-4DI-4DO-PN-FSOE-V2	B.113
2464580000	UR20-4DI-4DO-PN-FSOE-V2	B.114
2464580000	UR20-4DI-4DO-PN-FSOE-V2	B.99
2464590000	UR20-8DI-PN-FSPS-V2	B.102
2464590000	UR20-8DI-PN-FSPS-V2	B.113
2464590000	UR20-8DI-PN-FSPS-V2	B.114
2464600000	UR20-8DI-PN-FSOE-V2	B.100
2464600000	UR20-8DI-PN-FSOE-V2	B.113
2464600000	UR20-8DI-PN-FSOE-V2	B.114
2465940000	UR20-PK-2464600000-SP	B.100
2465940000	UR20-PK-2464600000-SP	B.113
2465950000	UR20-PK-2464590000-SP	B.102
2465950000	UR20-PK-2464590000-SP	B.113
2465960000	UR20-EM-2464600000-SP	B.100
2465960000	UR20-EM-2464600000-SP	B.113
2465990000	UR20-PK-2464580000-SP	B.113
2465990000	UR20-PK-2464580000-SP	B.99
2466000000	UR20-PK-2464570000-SP	B.101
2466000000	UR20-PK-2464570000-SP	B.113
2466010000	UR20-EM-2464590000-SP	B.102
2466010000	UR20-EM-2464590000-SP	B.113
2466020000	UR20-EM-2464580000-SP	B.113
2466020000	UR20-EM-2464580000-SP	B.99
2466030000	UR20-EM-2464570000-SP	B.101
2466030000	UR20-EM-2464570000-SP	B.113

2470000000

2476450000	UR20-FBC-MOD-TCP-V2	B.11
2476450000	UR20-FBC-MOD-TCP-V2	B.113
2476450000	UR20-FBC-MOD-TCP-V2	B.114

2480000000

2485280000	UR20-PK-2476450000-SP	B.11
2485280000	UR20-PK-2476450000-SP	B.113
2489830000	UR20-1SM-50W-6DI2DO-P	B.113
2489830000	UR20-1SM-50W-6DI2DO-P	B.114
2489830000	UR20-1SM-50W-6DI2DO-P	B.57

2500000000

2508760000	UR20-PK-1315740000-SP	B.113
2508760000	UR20-PK-1315740000-SP	B.96
2508770000	UR20-PK-2453880000-SP	B.113
2508770000	UR20-PK-2453880000-SP	B.82
2508780000	UR20-PK-2453870000-SP	B.113
2508780000	UR20-PK-2453870000-SP	B.84
2508790000	UR20-EM-2453880000-SP	B.113
2508790000	UR20-EM-2453880000-SP	B.82
2508800000	UR20-EM-2453870000-SP	B.113
2508800000	UR20-EM-2453870000-SP	B.84

Order No.	Type	Page

2510000000

2512830000	UR67-MP-78-16DIO-12-60M	C.38
2512830000	UR67-MP-78-16DIO-12-60M	C.8
2512840000	UR67-MP-HP-16DIO-12-60M	C.38
2512840000	UR67-MP-HP-16DIO-12-60M	C.6

2540000000

2544660000	UR20-4AI-UI-DIF-32-DIAG	B.68
2545610000	UR20-PK-2456540000-SP	B.113
2545610000	UR20-PK-2456540000-SP	B.72
2545620000	UR20-EM-2456540000-SP	B.113
2545620000	UR20-EM-2456540000-SP	B.72
2545760000	UR20-PK-2457240000-SP	B.113
2545760000	UR20-PK-2457240000-SP	B.34
2545770000	UR20-PK-2457250000-SP	B.113
2545770000	UR20-PK-2457250000-SP	B.49
2545780000	UR20-EM-2457240000-SP	B.113
2545780000	UR20-EM-2457240000-SP	B.34
2545790000	UR20-EM-2457250000-SP	B.113
2545790000	UR20-EM-2457250000-SP	B.49

2550000000

2550610000	UR20-EM-2544660000-SP	B.68
2550620000	UR20-PK-2544660000-SP	B.68
2555800000	UV66-BAS-4-RES-W	D.4
2555810000	UV66-BAS-7-RES-W	D.4
2555820000	UV66-BAS-10-RES-W	D.5
2555830000	UV66-ADV-7-CAP-W	D.6
2555840000	UV66-ADV-10-CAP-W	D.6
2555850000	UV66-ADV-15-CAP-W	D.7
2555940000	UR20-8AI-RTD-DIAG-2W	B.113
2555940000	UR20-8AI-RTD-DIAG-2W	B.114
2555940000	UR20-8AI-RTD-DIAG-2W	B.73

2560000000

2566380000	UR20-FBC-PN-IRT-V2	B.113
2566380000	UR20-FBC-PN-IRT-V2	B.114
2566380000	UR20-FBC-PN-IRT-V2	B.7

2570000000

2573750000	UR20-PK1-2489830000-SP	B.113
2573750000	UR20-PK1-2489830000-SP	B.57

2580000000

2585650000	UR20-PK2-2489830000-SP	B.113
2585650000	UR20-PK2-2489830000-SP	B.57
2585660000	UR20-EM-2489830000-SP	B.113
2585660000	UR20-EM-2489830000-SP	B.57

2590000000

2593300000	UR20-PK-2555940000-SP	B.113
2593300000	UR20-PK-2555940000-SP	B.73
2593310000	UR20-EM-2555940000-SP	B.113
2593310000	UR20-EM-2555940000-SP	B.73
2593320000	UR20-PK-2456530000-SP	B.113
2593320000	UR20-PK-2456530000-SP	B.53
2593330000	UR20-EM-2456530000-SP	B.113
2593330000	UR20-EM-2456530000-SP	B.53
2599670000	UR67-PN-V14-CU-8DIDO-12	C.38
2599670000	UR67-PN-V14-CU-8DIDO-12	C.9
2599680000	UR67-PN-V14-CU-16DI-12	C.38
2599680000	UR67-PN-V14-CU-16DI-12	C.9
2599690000	UR67-PN-V14-POF-8DIDO-12	C.10
2599690000	UR67-PN-V14-POF-8DIDO-12	C.38
2599700000	UR67-PN-V14-POF-16DI-12	C.10
2599700000	UR67-PN-V14-POF-16DI-12	C.38

2600000000

2605350000	UR20-PK-1334990000-SP	A.6
2605360000	UR20-PK-1334950000-SP	A.5

2610000000

2614380000	UR20-FBC-PB-DP-V2	B.113
2614380000	UR20-FBC-PB-DP-V2	B.114
2614380000	UR20-FBC-PB-DP-V2	B.5

2620000000

2623120000	UR20-PK-2614380000-SP	B.113
2623120000	UR20-PK-2614380000-SP	B.5
2623640000	UR20-PK-2566380000-SP	B.113
2623640000	UR20-PK-2566380000-SP	B.7

2630000000

2638920000	UC20-SL2000-OLAC-EC	A.4

2660000000

2660130000	U-CREATE-STUDIO	A.4

Order No.	Type	Page
2660130000	U-CREATE-STUDIO	F.2
2665170000	UR20-PK-2674520000-SP	A.4
2665800000	UV20-B-IPC-1011.01	E.4
2665810000	UV20-B-IPC-2001.02	E.6
2665820000	UV20-B-IPC-3031.01	E.9
2665830000	UV66-ADV-7-IPPC-1001.01	E.11

2670000000

2676340000	UV20-B-IPC-1000.01	E.4
2676350000	UV20-B-IPC-1011.02	E.5
2676370000	UV20-B-IPC-2001.01	E.6
2676380000	UV20-B-IPC-2001.03	E.7
2676390000	UV20-B-IPC-3000.01	E.8
2676400000	UV20-B-IPC-3010.01	E.8
2676410000	UV20-B-IPC-3021.01	E.9
2676420000	UV20-B-IPC-3032.01	E.9
2676430000	UV66-BAS-7-IPPC-1001.01	E.10
2676450000	UV66-BAS-10-IPPC-1001.01	E.10
2676460000	UV66-ADV-10-IPPC-1001.01	E.11
2676470000	UV66-BAS-12-IPPC-1001.01	E.10
2676480000	UV66-ADV-12-IPPC-1001.01	E.11
2676490000	UV66-BAS-15-IPPC-1001.01	E.10
2676500000	UV66-ADV-15-IPPC-1001.01	E.11
2676510000	UV66-ADV-12-IPPC-3001.01	E.12
2676520000	UV66-ADV-12-IPPC-3022.01	E.12
2676530000	UV66-ADV-15-IPPC-3001.01	E.12
2676540000	UV66-ADV-15-IPPC-3022.01	E.12
2676550000	UV66-ADV-18-IPPC-3001.01	E.12
2676560000	UV66-ADV-18-IPPC-3022.01	E.12
2676570000	UV66-ADV-21-IPPC-3001.01	E.12
2676580000	UV66-ADV-21-IPPC-3022.01	E.12
2676660000	UV66-ADV-10-IPM-10	E.13
2676670000	UV66-ADV-12-IPM-10	E.13
2676680000	UV66-ADV-15-IPM-10	E.13
2676690000	UV66-ADV-18-IPM-10	E.13
2676700000	UV66-ADV-21-IPM-10	E.13

2680000000

2684400000	SD-CARD-8GB	A.4
2684400000	SD-CARD-8GB	A.5
2684400000	SD-CARD-8GB	A.6
2684410000	BATTERY-CR1220-3V	A.4
2684410000	BATTERY-CR1220-3V	A.5
2684410000	BATTERY-CR1220-3V	A.6

2700000000

2705640000	U-CREATE-PROCON-WEB-D-200	F.7
2705650000	U-CREATE-PROCON-WEB-D-500	F.7
2705660000	U-CREATE-PROCON-WEB-D-1000	F.7
2705670000	U-CREATE-PROCON-WEB-D-2000	F.7
2705680000	U-CREATE-PROCON-WEB-D-5000	F.7
2705730000	U-CREATE-PROCON-WEB-RT-200	F.7
2705740000	U-CREATE-PROCON-WEB-RT-500	F.7
2705750000	U-CREATE-PROCON-WEB-RT-1000	F.7
2705760000	U-CREATE-PROCON-WEB-RT-2000	F.7
2705770000	U-CREATE-PROCON-WEB-RT-5000	F.7
2705820000	U-CREATE-PROCON-WEB-D-UC-100	F.7
2705830000	U-CREATE-PROCON-WEB-D-UC-2000	F.7
2705840000	U-CREATE-PROCON-WEB-D-UC-5000	F.7
2708630000	U-CREATE-PROCON-WEB-RT-UC-2000	F.7
2708640000	U-CREATE-PROCON-WEB-RT-UC-5000	F.7

7780000000

7789306010	PAC-UNIV-HE20-LCH-1M	B.27
7789306010	PAC-UNIV-HE20-LCH-1M	B.33
7789306010	PAC-UNIV-HE20-LCH-1M	B.34
7789306010	PAC-UNIV-HE20-LCH-1M	B.43
7789306010	PAC-UNIV-HE20-LCH-1M	B.48
7789306010	PAC-UNIV-HE20-LCH-1M	B.66

9000000000

9002650000	KT 8	C.34
9002650000	KT 8	C.35
9002650000	KT 8	C.36

9030000000

9030060000	AM 12	C.34
9030060000	AM 12	C.35
9030060000	AM 12	C.36

9200000000

9202210000	MULTI-STRIPAX 6-16	B.25
9202210000	MULTI-STRIPAX 6-16	B.41
9202210000	MULTI-STRIPAX 6-16	B.62
9202210000	MULTI-STRIPAX 6-16	B.63
9202210000	MULTI-STRIPAX 6-16	B.64
9202210000	MULTI-STRIPAX 6-16	B.65
9202210000	MULTI-STRIPAX 6-16	B.85
9202210000	MULTI-STRIPAX 6-16	B.86
9203110000	STRIPPER 6-16 RED-LINE	C.34
9203110000	STRIPPER 6-16 RED-LINE	C.35
9203110000	STRIPPER 6-16 RED-LINE	C.36

Order No.	Type	Page

9440000000

9445700000	RS 16I0 1W H S	B.27
9445700000	RS 16I0 1W H S	B.33
9445700000	RS 16I0 1W H S	B.34
9445700000	RS 16I0 1W H S	B.43
9445700000	RS 16I0 1W H S	B.48

9450000000

9456150150	SAIL-M8BW-4-1.5U	C.35
9456380150	SAIL-M12BW-4-2L1.5U	C.36
9457320150	SAIL-M12BW-3-1.5U	C.34
9457380150	SAIL-M8BW-3-1.5U	C.35
9457450150	SAIL-M8BG-3-1.5U	C.35
9457460150	SAIL-M8BW-3L1.5U	C.36
9457610150	SAIL-M12G-5-1.5U	C.14
9457610150	SAIL-M12G-5-1.5U	C.15
9457610150	SAIL-M12G-5-1.5U	C.16
9457610150	SAIL-M12G-5-1.5U	C.4
9457610150	SAIL-M12G-5-1.5U	C.5
9457610150	SAIL-M12G-5-1.5U	C.6
9457610150	SAIL-M12G-5-1.5U	C.7
9457610150	SAIL-M12G-5-1.5U	C.8
9457670150	SAIL-M12W-5-1.5U	C.14
9457670150	SAIL-M12W-5-1.5U	C.15
9457670150	SAIL-M12W-5-1.5U	C.16
9457670150	SAIL-M12W-5-1.5U	C.4
9457670150	SAIL-M12W-5-1.5U	C.5
9457670150	SAIL-M12W-5-1.5U	C.6
9457670150	SAIL-M12W-5-1.5U	C.7
9457670150	SAIL-M12W-5-1.5U	C.8
9457730150	SAIL-M12BG-4-1.5U	C.34
9457740150	SAIL-M12BW-4-1.5U	C.34
9457800150	SAIL-M12BW-3L1.5U	C.36
9457820150	SAIL-M12BG-3-1.5U	C.34
9457850150	SAIL-M8BG-4-1.5U	C.35

X

Addresses worldwide

Let's connect.

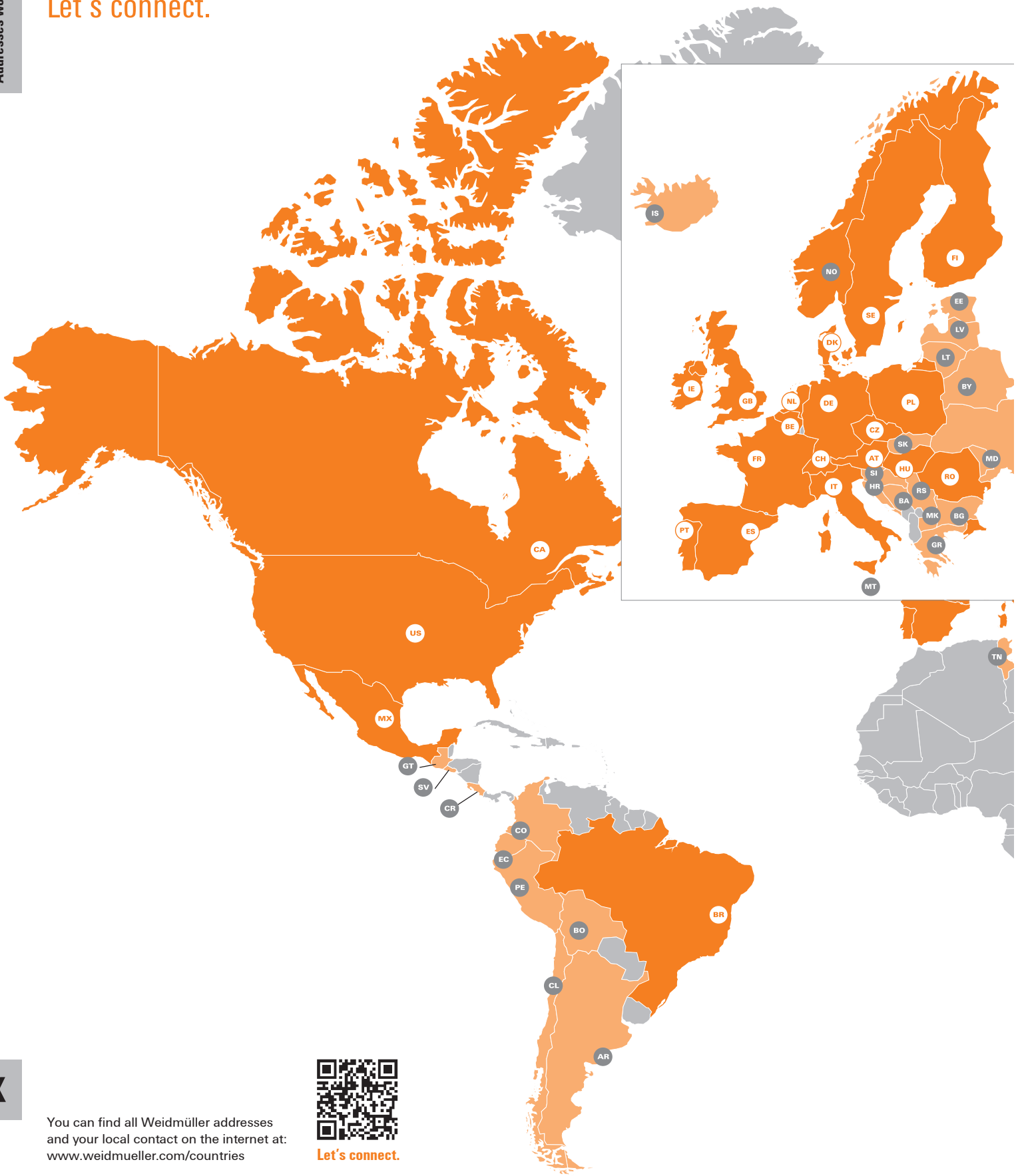

You can find all Weidmüller addresses and your local contact on the internet at: www.weidmueller.com/countries

Let's connect.

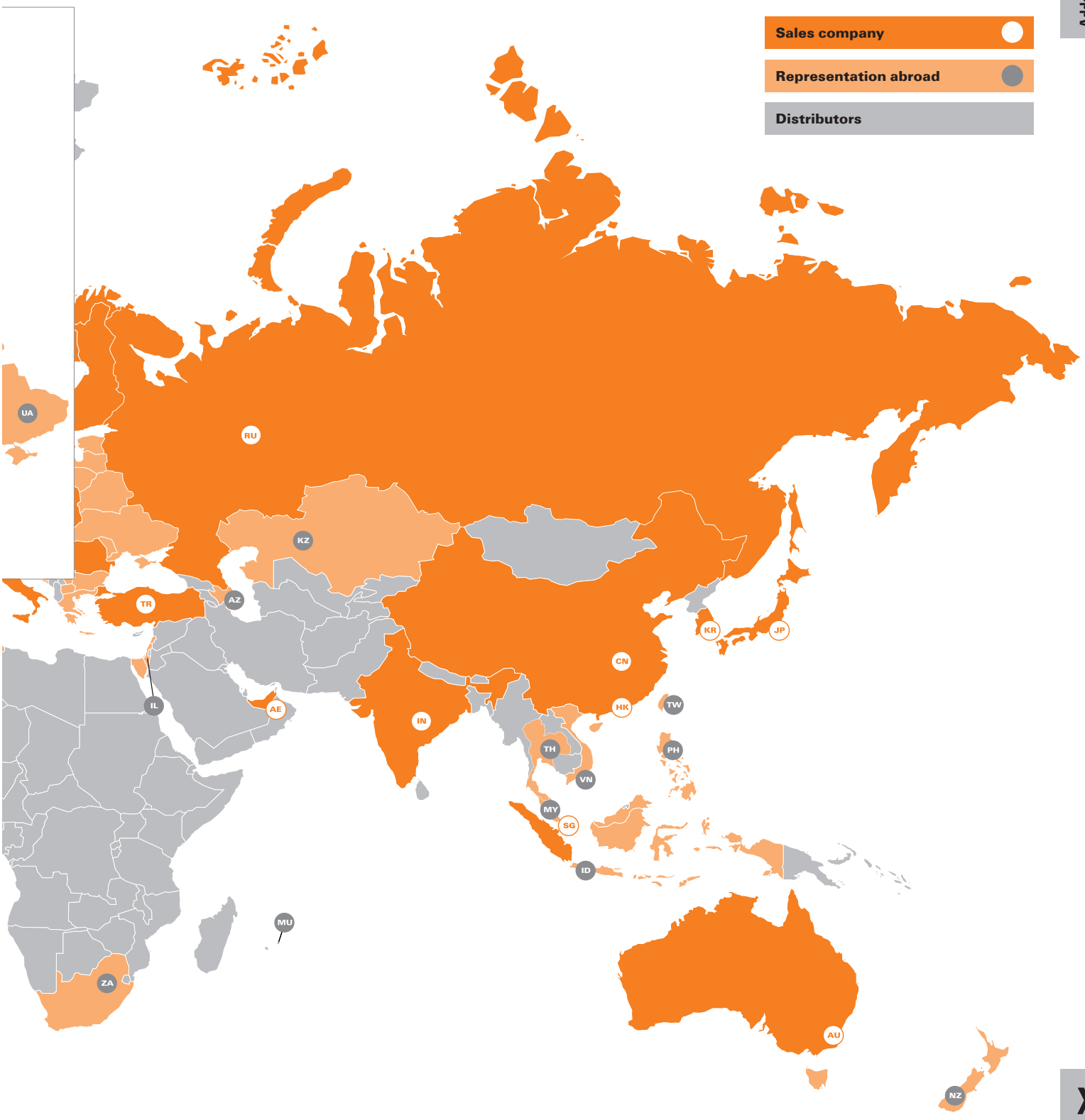
Sales company
Representation abroad
Distributors
UA
RU
KZ
TR
AZ
IL
AE
IN
CN
KR
JP
HK
TW
TH
PH
VN
MY
SG
ID
MU
ZA
AU
NZ

We cannot guarantee that there are no mistakes in the publications or software provided by us to the customer for the purpose of making orders. We try our best to quickly correct errors in our printed media.

All orders are based on our general terms of delivery, which can be reviewed on the websites of our group companies where you place your order. On demand we can also send the general terms of delivery to you.

Weidmüller – Your partner in Industrial Connectivity

As experienced experts we support our customers and partners around the world with products, solutions and services in the industrial environment of power, signal and data. We are at home in their industries and markets and know the technological challenges of tomorrow. We are therefore continuously developing innovative, sustainable and useful solutions for their individual needs. Together we set standards in Industrial Connectivity.

Weidmüller Interface GmbH & Co. KG
Klingenbergstraße 26
32758 Detmold, Germany
T +49 5231 14-0
F +49 5231 14-292083
www.weidmueller.com

Personal support can
be found on our website:
www.weidmueller.com/contact

Made in Germany

Order Number: 2551880000/10/2019/SMR